# SKA Digital Multi-beam Forming Technology

SHAO

Baoqiang Lao

2015.9.8

# Outline

- Overview of SKA
- The concept of beam
- Theory of Beamforming
- Digital Beamforming key technologies
- Our solutions
- Future works

# Radio Renaissance

- Radio astronomy is currently undergoing a renaissance in terms of construction of new instruments and revitalization of high impact science goals
- In the last decade a number of new radio telescopes have been constructed and older telescopes upgraded:
  - LOFAR => International LOFAR Telescope (ILT)
  - VLA => Jansky Very Large Array (JVLA)
  - MERLIN => E-Merlin
  - Australian SKA Pathfinder (ASKAP)
  - MeerKAT
  - Fiver Hundred Meter Aperture Synthesis Telescope (FAST)
  - Westerbork Radio Synthesis Telescope (WRST) => APERTIF
  - Murchison Widefield Array (MWA) => MWA2
- At the end of this next decade this will culminate in the Square Kilometre Array（SKA）

# What is **SKA?**

- The SKA will be an observatory spanning sites in Australia and South Africa designed to answer some of the fundamental concepts in astrophysics.
- The SKA will be built in two phases with a phase 1 budget of 650+330 millions euros.
- Current member countries for the SKA: Australia, Canada, China, India, Italy, Netherlands, New Zealand, South Africa, Sweden, United Kingdom
- In addition there are researchers and engineers in over 20 countries associated with SKA science and engineering.

# What is **SKA?**

- The SKA will process vast amounts of data, requiring supercomputers which do not yet exist.
- The cabling and fibre required for the SKA could encircle the Earth several times.
- The sensitivity of the full SKA will be 100x greater than present day instruments and for phase 1 it will be up to 8 times more sensitive than present telescopes.
- We cannot make such a large jump in one step. We need to take smaller steps to get to our goal.

# SKA Precursors

- The SKA Organisation has defined two terms for next generation radio telescopes which will produce lessons for the SKA：
  - Pathfinder
  - Precursor
- There are 9 pathfinders such as LOFAR and the eVLA
- There are three Precursors： MeerKAT, ASKAP and MWA
  - South Africa: MeerKAT (in construction)
  - Australia: ASKAP (in construction) and MWA (in operation)
  - China:Tianlai Project and 21CMA (in operation)

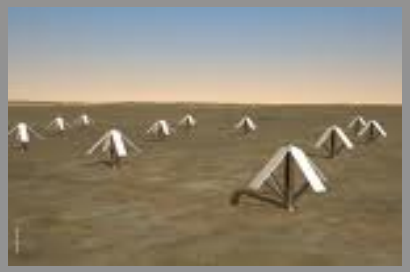

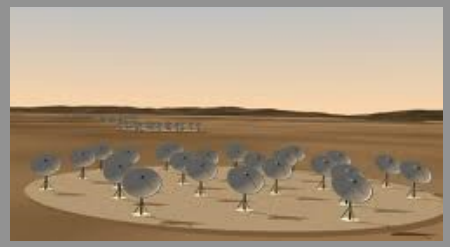

SKA

SKA - Low

SKA -mid

Official SKA Precursor Telescopes

MWA

ASKAP

MeerKAT

SKA1 LOW will not be a direct build out of MWA but rather a stand alone instrument on the same site. SKA1 LOW will be 8 times LOFAR

ASKAP may become part of the SKA Observatory in the future but that is subject to further negotiations

SKA1 MID will be a build out of MeerKAT with the addition of 133 more antennas out to ~150km baselines

**SKA1 Low**
**FoV = 27 deg$^2$**
**5.86 x 5.86 deg**
**Resolution = 11”**

**SKA1 MID**
**FoV = 0.49 deg$^2$**
**0.79 x 0.79 deg**
**Resolution = 0.22”**

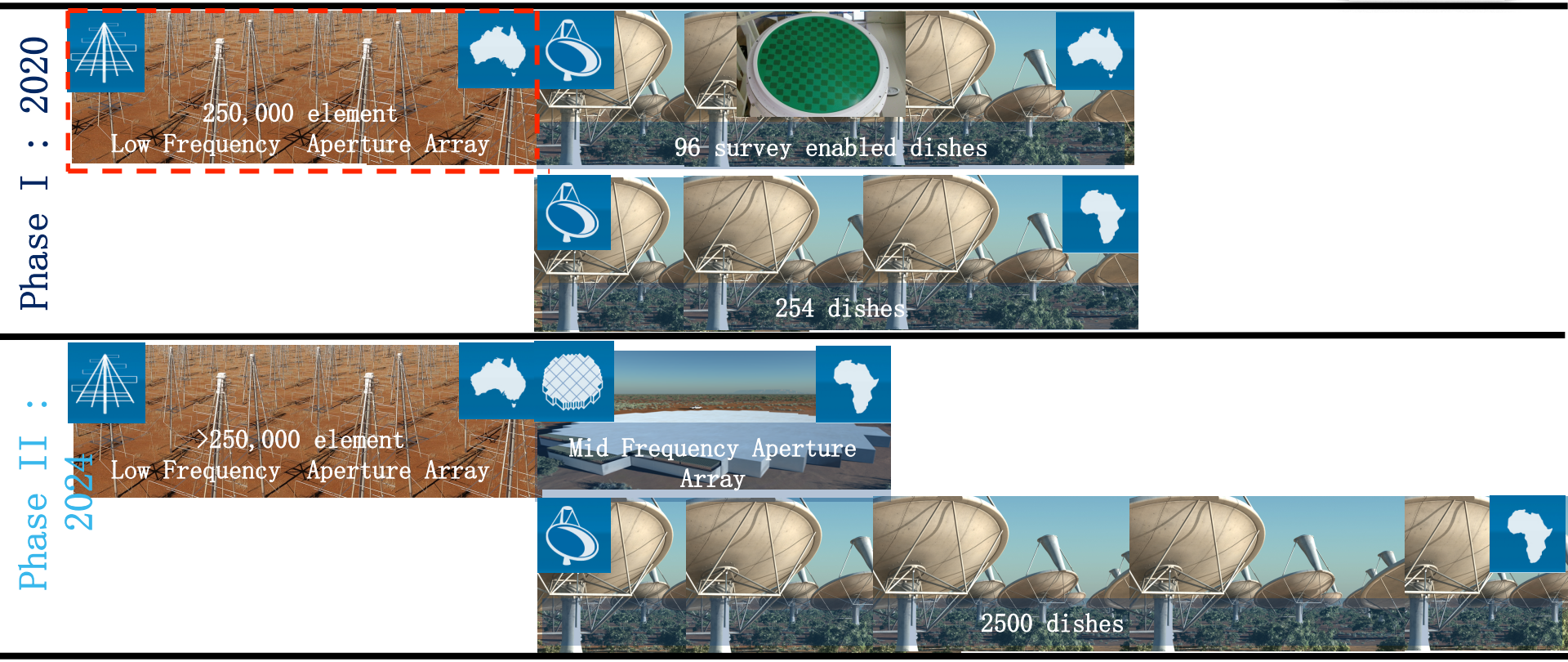


- SKA1_LOW: 133,000 low frequency dipoles in Australia operating from 50–350 MHz
- The max baseline will be 80 km
- 8x more sensitive than LOFAR
- 135x the survey speed of LOFAR

# Tasks and Goals?

Station subsystem

Beamforming

CSP subsystem

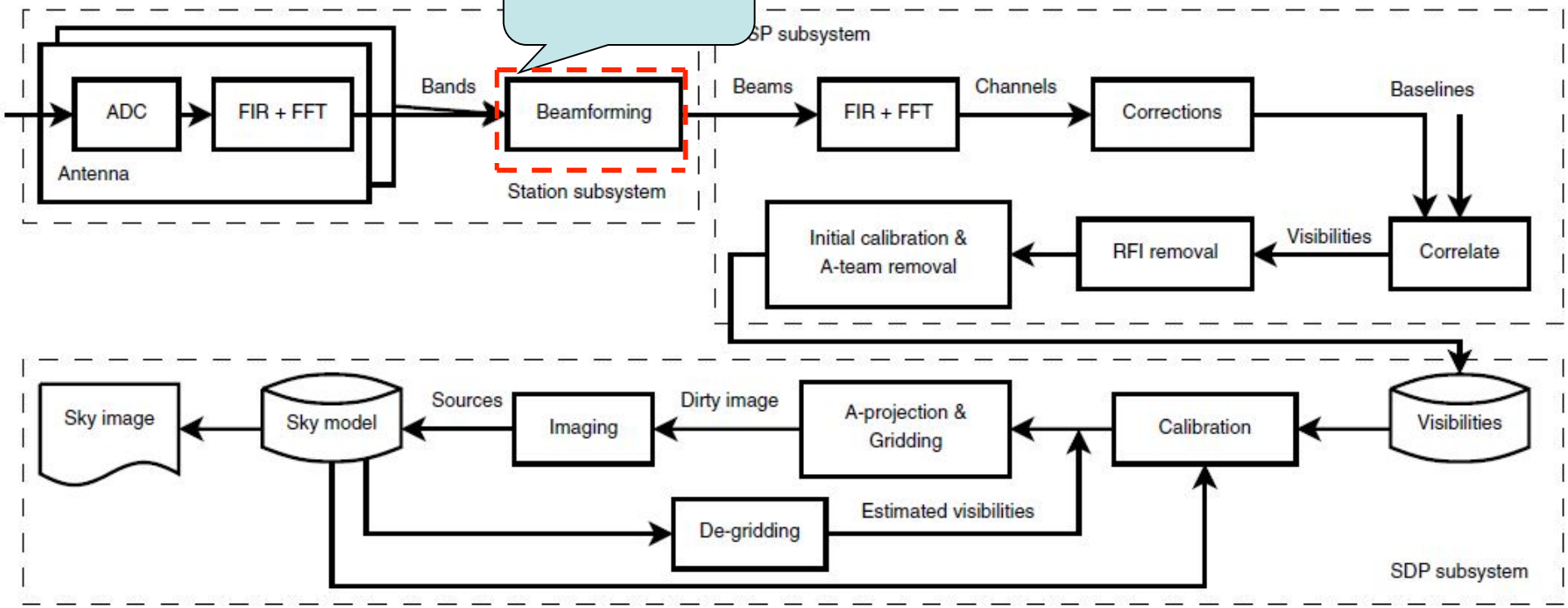


SDP subsystem

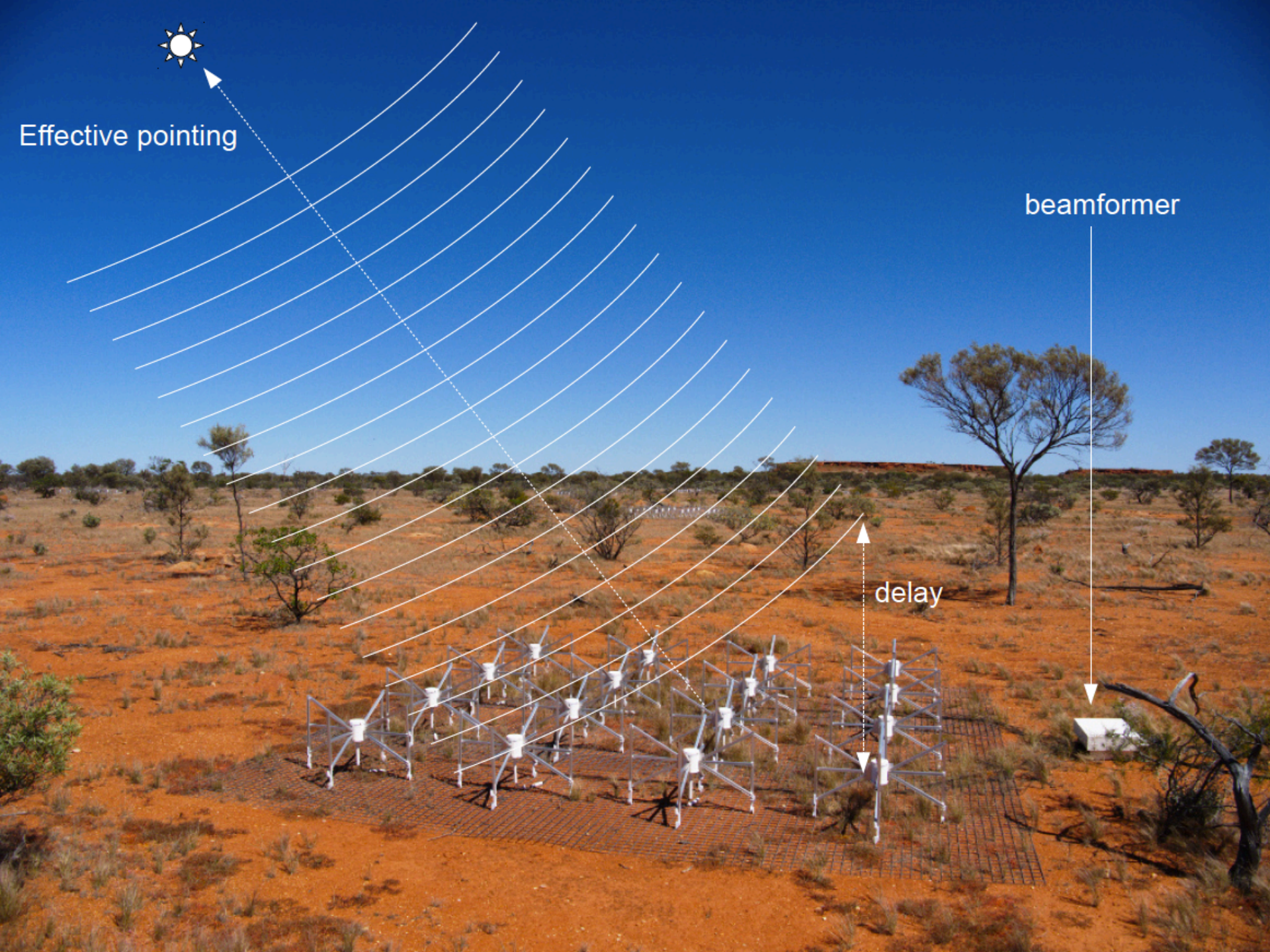
Effective pointing
beamformer
delay

# Beam of Traditinal Telescopes

Effective collecting area $A(\nu,\theta,\phi)$ $m^2$

On-axis response $A_0 = \eta A$
$\eta$ = aperture efficiency

Normalized pattern (primary beam)
$\boldsymbol{A}(\nu,\theta,\phi) = A(\nu,\theta,\phi)/A_0$

Beam solid angle
$\Omega_A = \iint_{\text{all sky}} \boldsymbol{A}(\nu,\theta,\phi)\, d\Omega$

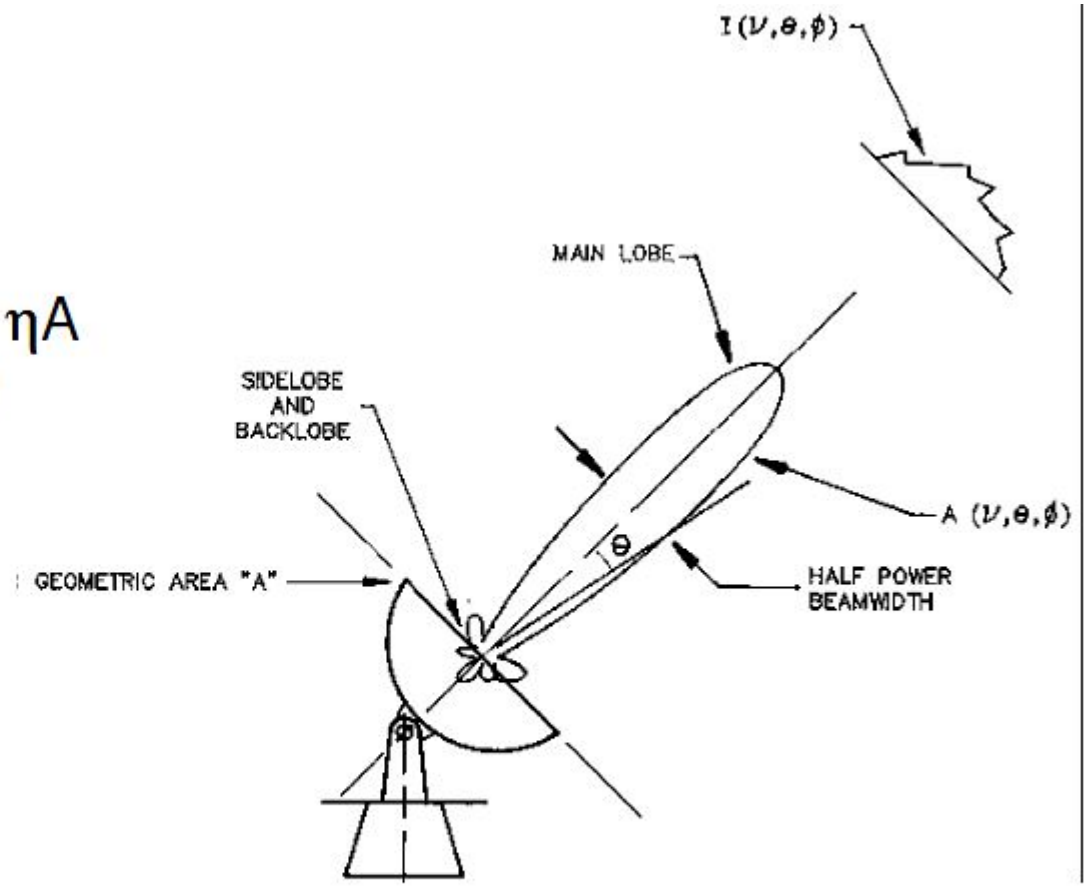


$A_0\,\Omega_A = \lambda^2$ $\lambda$ = wavelength, $\nu$ = frequency

# Beam of Traditinal Telescopes

f(u,v) = aperture field distribution
u,v = aperture coordinates
(in wavelengths)

F(l,m) = far-field voltage pattern
l = sinθcosϕ , m = sinθsinϕ

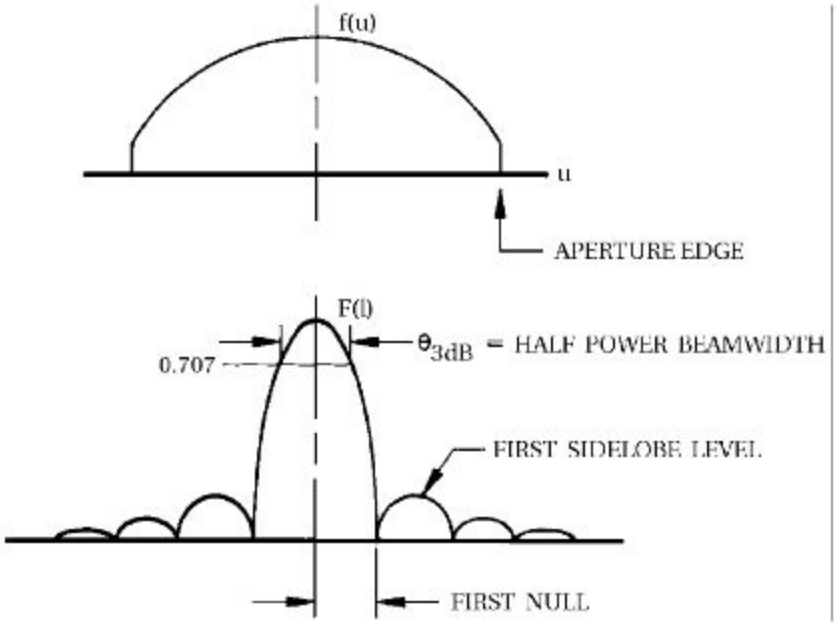


$$F(l,m) = \iint f(u,v)\exp(2\pi i(ul+vm))\,du\,dv$$

$$f(u,v) = \iint \mathrm{F}(\mathrm{l},\mathrm{m})\exp(-2\pi i(ul+vm))\,dl\,dm$$

# Traditinal Telescopes Features:

- Can be rotated
- Rotating => Beam pointing
- Beam shape infuencing factors:
  - Surface accuracy
  - Aperture size
  - Direction

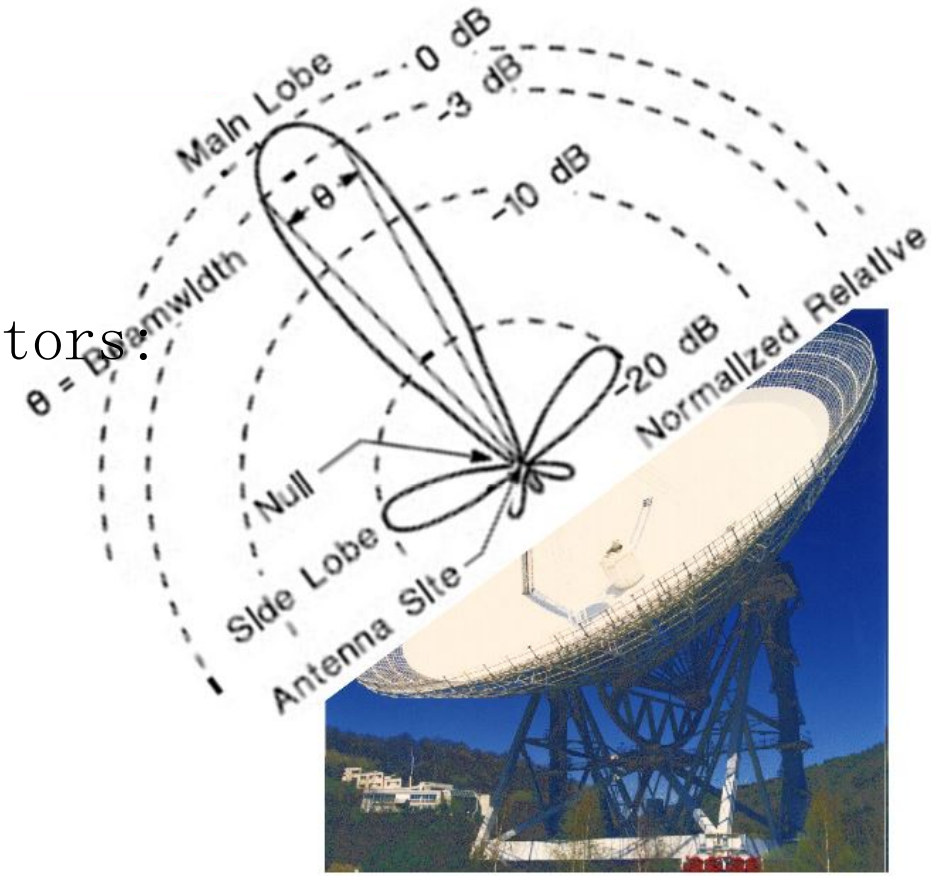

# SKA Beamforming theory

- by giving each antenna the right delay and weigth, and then adding the signals——Beam

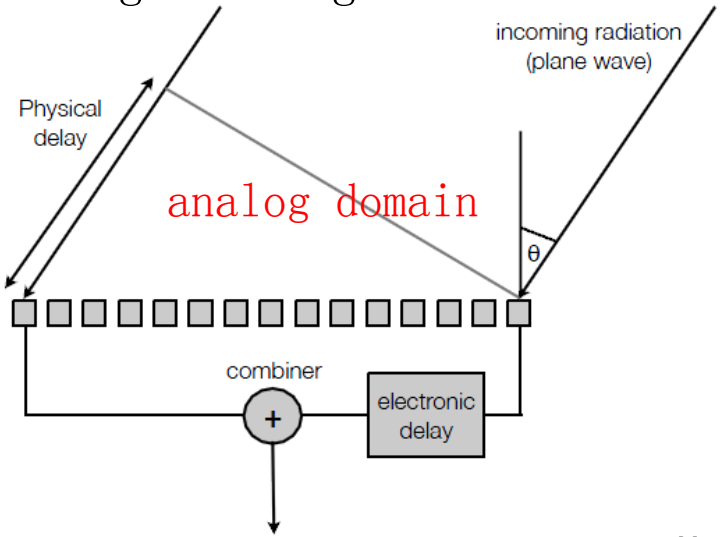


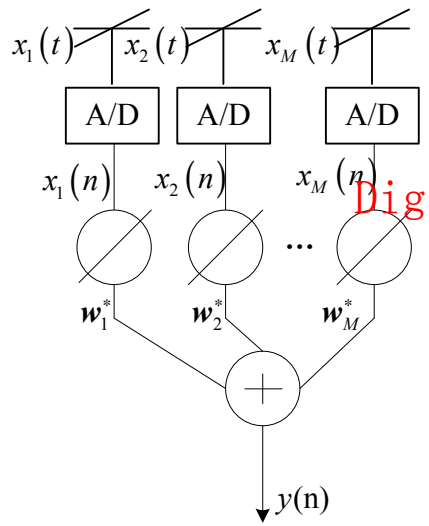


- Beamforming output: $y(t/n) = \sum_{i}^{M} w_i^* x_i(t/n)$ , *w is weight vector*
- Vertical incidence, Direct adding
- Different weigth, different pointing ——Multi-Beam
- Pointing to the intereste direction——Spatial Filter

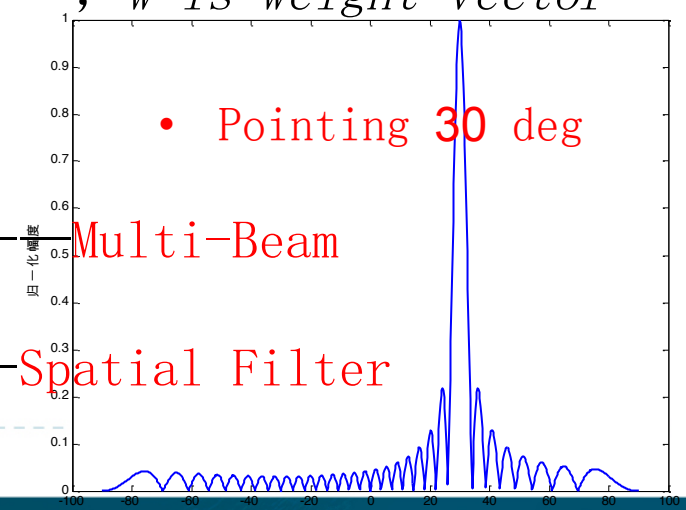

# Simple simulation results—
# 8 array element ULA beamforming

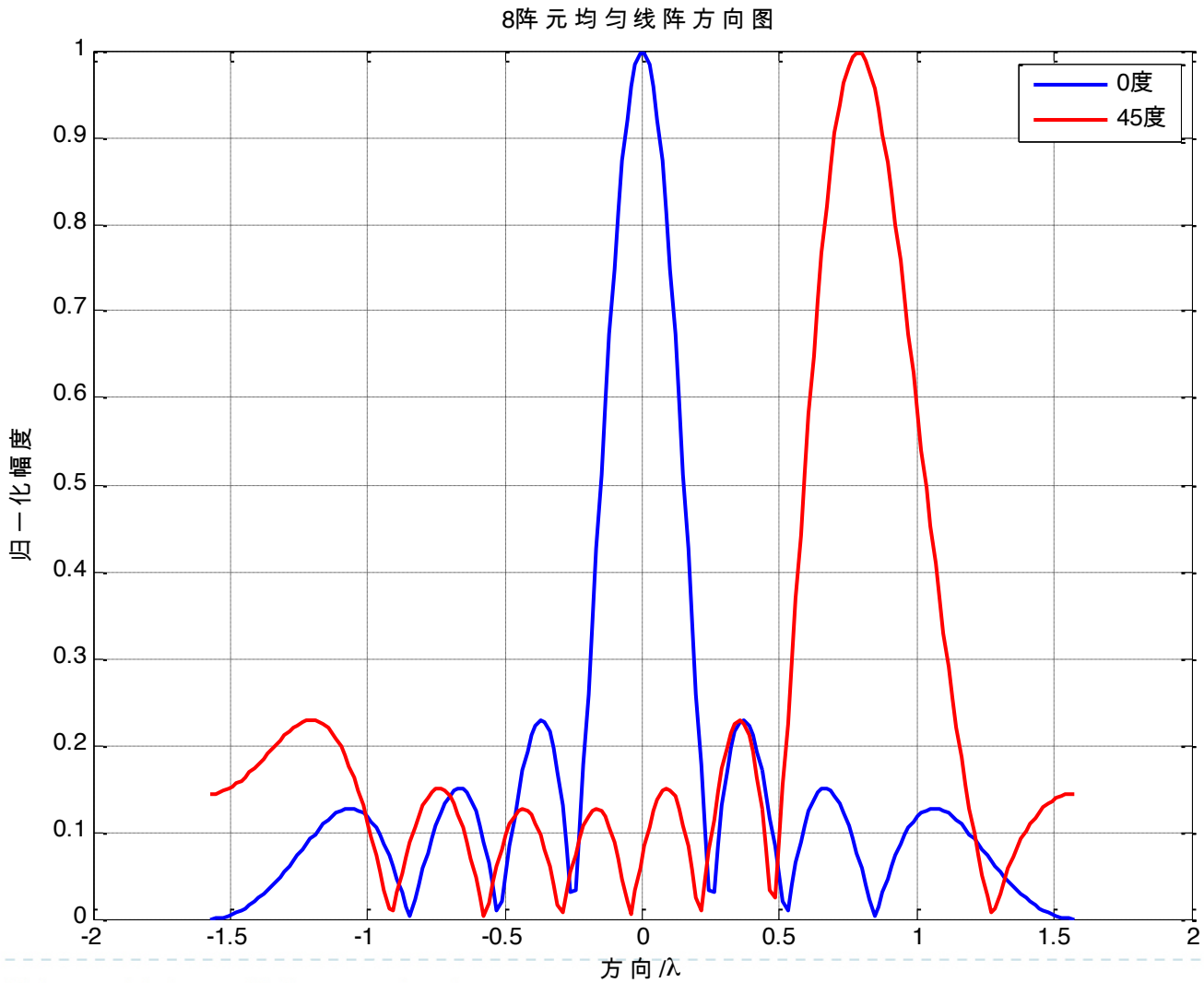

# SKA Beamforming Key Technologies

- Analog Beamforming
- Digital Beamforming
- Architecture of Beamformi
- Array calibration
- Algorithm of Beamforming
- Broadband digital Beamforming

| features | Analog Beamforming | Digital Beamforming |
|---|---|---|
| 实现 | 易于实现 | 复杂，但易于集成 |
| 波束产生 | 简单，易于实现有限波束 | 复杂，但可以非常灵活的产生任意带宽波束 |
| 多波束 | 结构固定，受自身限制 | 非常灵活输出所需数据 |
| 带宽 | 受限 | 整个带宽 |
| 校准 | 阵元幅度和时间校准，无偏振校准 | 频率和方向校准，高分辨率幅度、相位和偏振校准 |
| 功耗 | 小 | 可以改善，将与模拟相当或更小 |
| 成本 | 较低 | 较高 |

# Narrowband Digital Beamforming

- Condition:

  Bandwidth $BW << c/(M-1)d$

- Traditional method:

  Narrowband phase shift

  $$s(t-\tau) \approx s(t)e^{j2\pi\Delta f\tau}$$

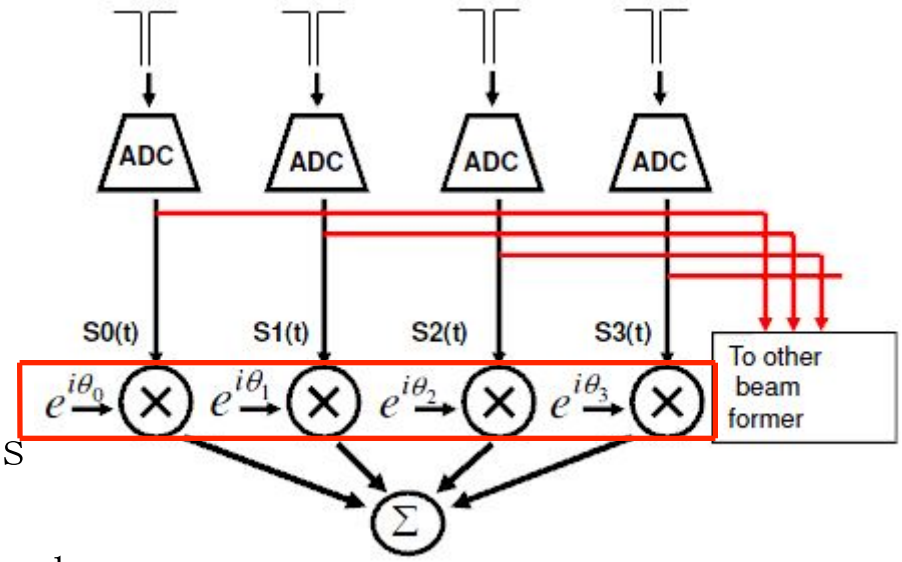


- Narrowband, bandwidth is far less than the center frequency
- Receiving envelope difference can be neglect

- Broadband
- Envelope can not be neglect
- Use narrowband phase shift, beam will be offset or broadening

# SKA Broadband Digital Beamforming

➢ Broadband digital time-delay method (Time domain)

- Silicon-based gated time-delay

✓ Based on FIR fiter, FIFO to integer time-delay and FIR fiter to Fractinal

- Based on linear interpolation time-delay

➢ Broadband digital phase shift (frequency domain, reduce computational)

- PFB+FFT channelation, muilt-channelation narrowband
- narrowband signal phase shift
- adding +array calibration, Beamforming

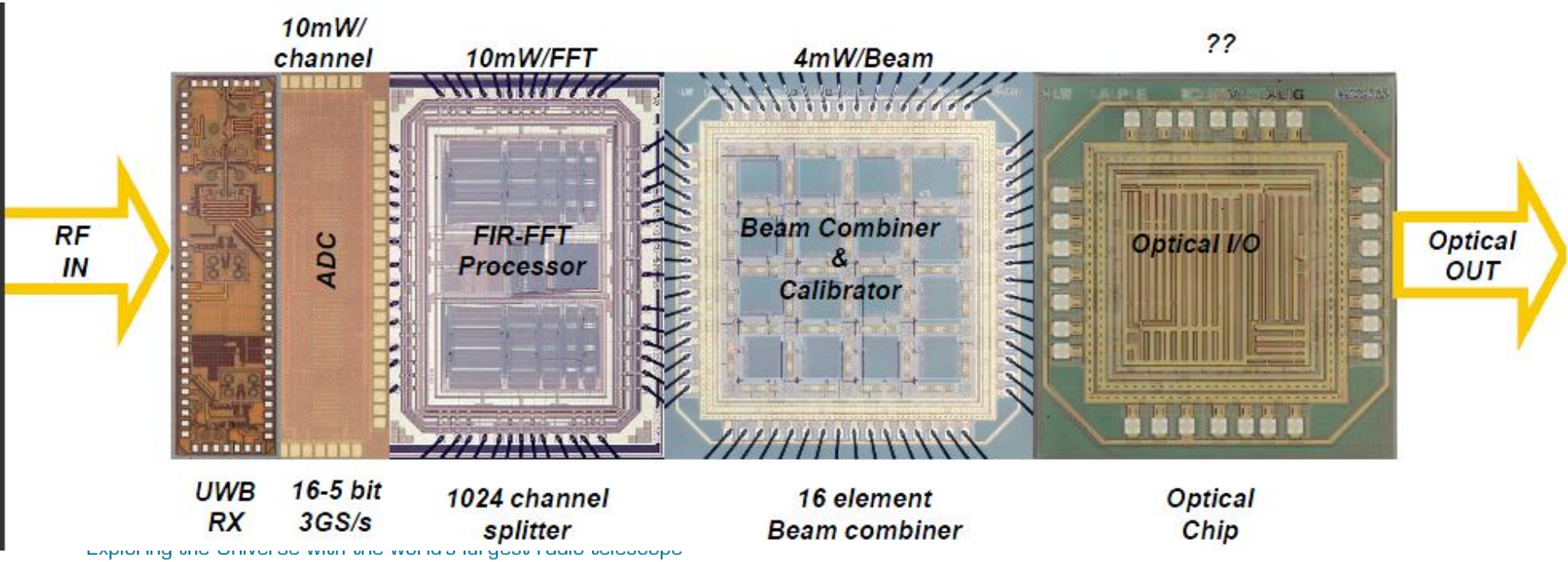

# Fractional time delay filter (FDF)

- Input signal x(t) delay $\tau$, output:

$$x(t) \longrightarrow \boxed{\delta(t-\tau)} \longrightarrow y(t) \qquad y(\mathrm{t}) = x(\mathrm{t}-\tau)$$

- Ts period sample:

$$y(\mathrm{n}) = x(\mathrm{n}-D), \qquad \mathrm{D} = \mathrm{L} + \mathrm{P}$$

Integer Fraction

- System response:

$$H(e^{jw}) = e^{-jw(\mathrm{L}+\mathrm{P})} = e^{-jwL} \cdot e^{-jwP}$$

Digital delay line

Unlimited non-causal system can not be achieved

- Fraction Time-delay: finite order of the filter unlimited $e^{-jw}$ approximation

✓ FIR filter

➢ IIR filter

- Approximation method

➢ Least squares method

➢ Windows method

➢ Power spectrum

# FD-FIR

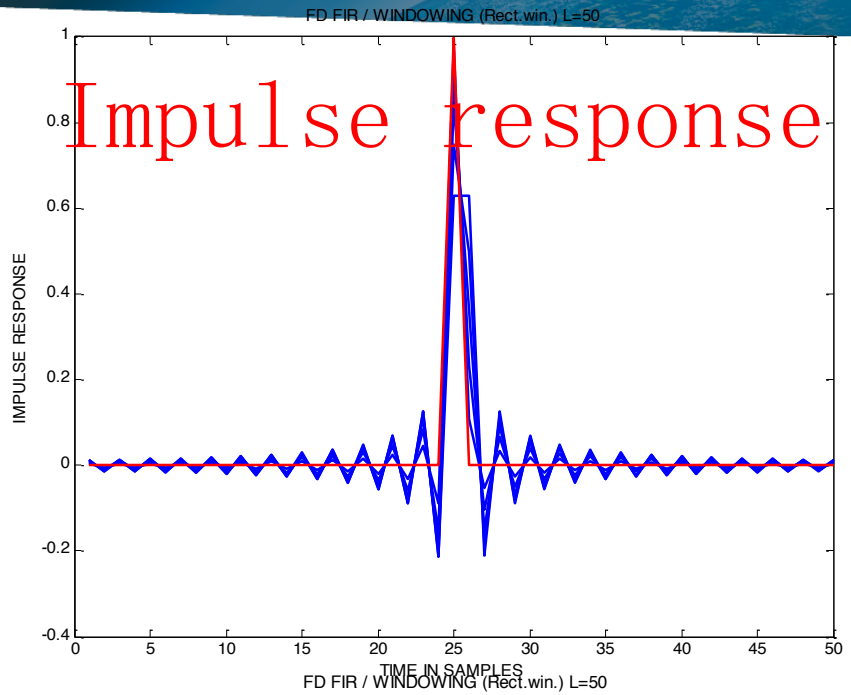
FD FIR / WINDOWING (Rect.win.) L=50
Impulse response
IMPULSE RESPONSE
TIME IN SAMPLES

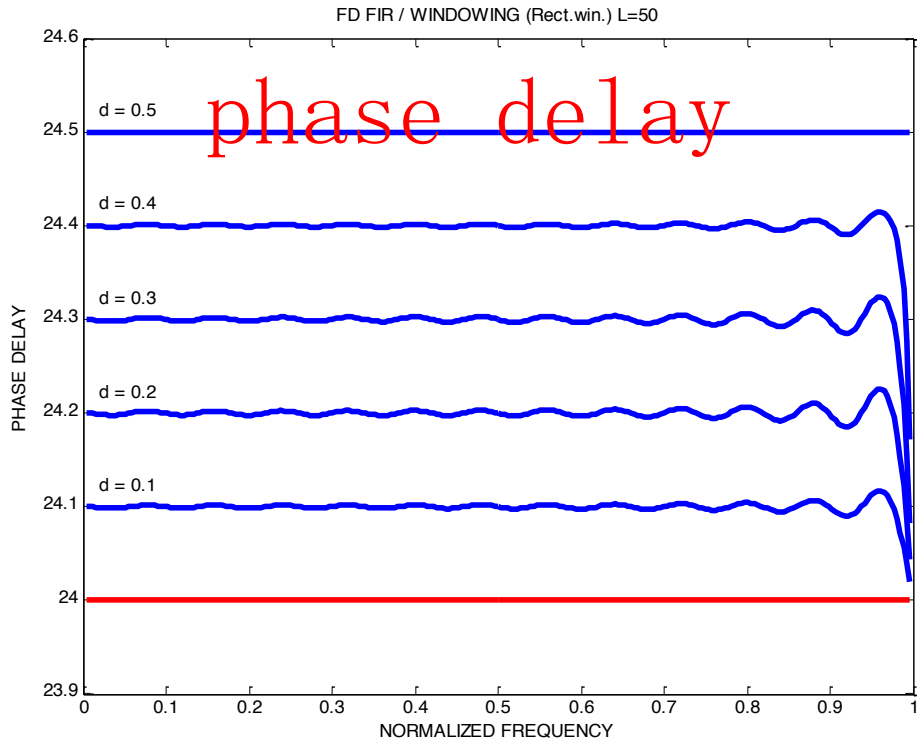
FD FIR / WINDOWING (Rect.win.) L=50
phase delay
d = 0.5
d = 0.4
d = 0.3
d = 0.2
d = 0.1
PHASE DELAY
NORMALIZED FREQUENCY

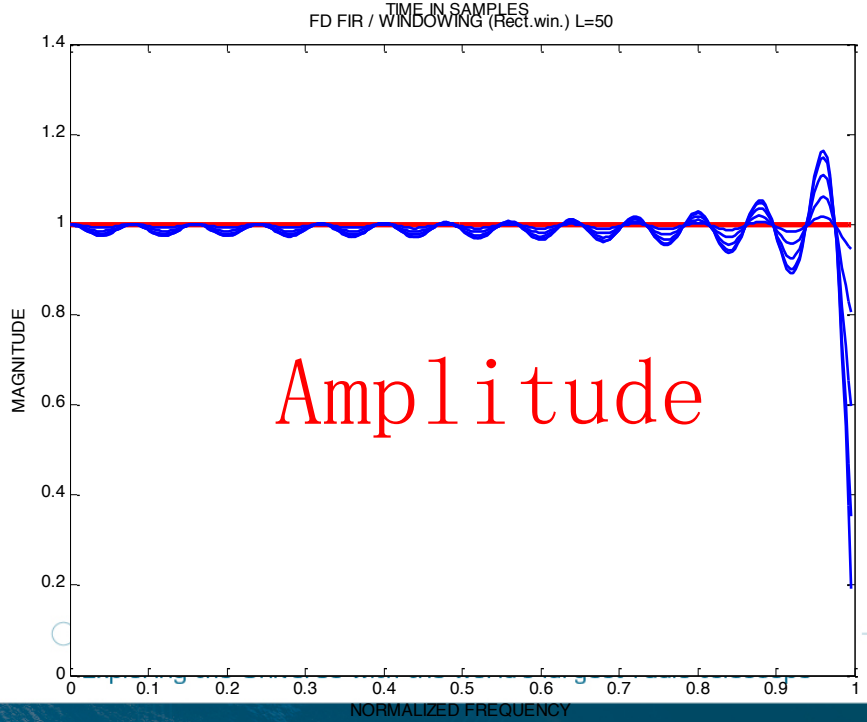
FD FIR / WINDOWING (Rect.win.) L=50
Amplitude
MAGNITUDE
NORMALIZED FREQUENCY

# Polyphase Filter Bank Channelation

- Polyphase filter band:

  A common input wideband signal, a number of sub-band signal outpu

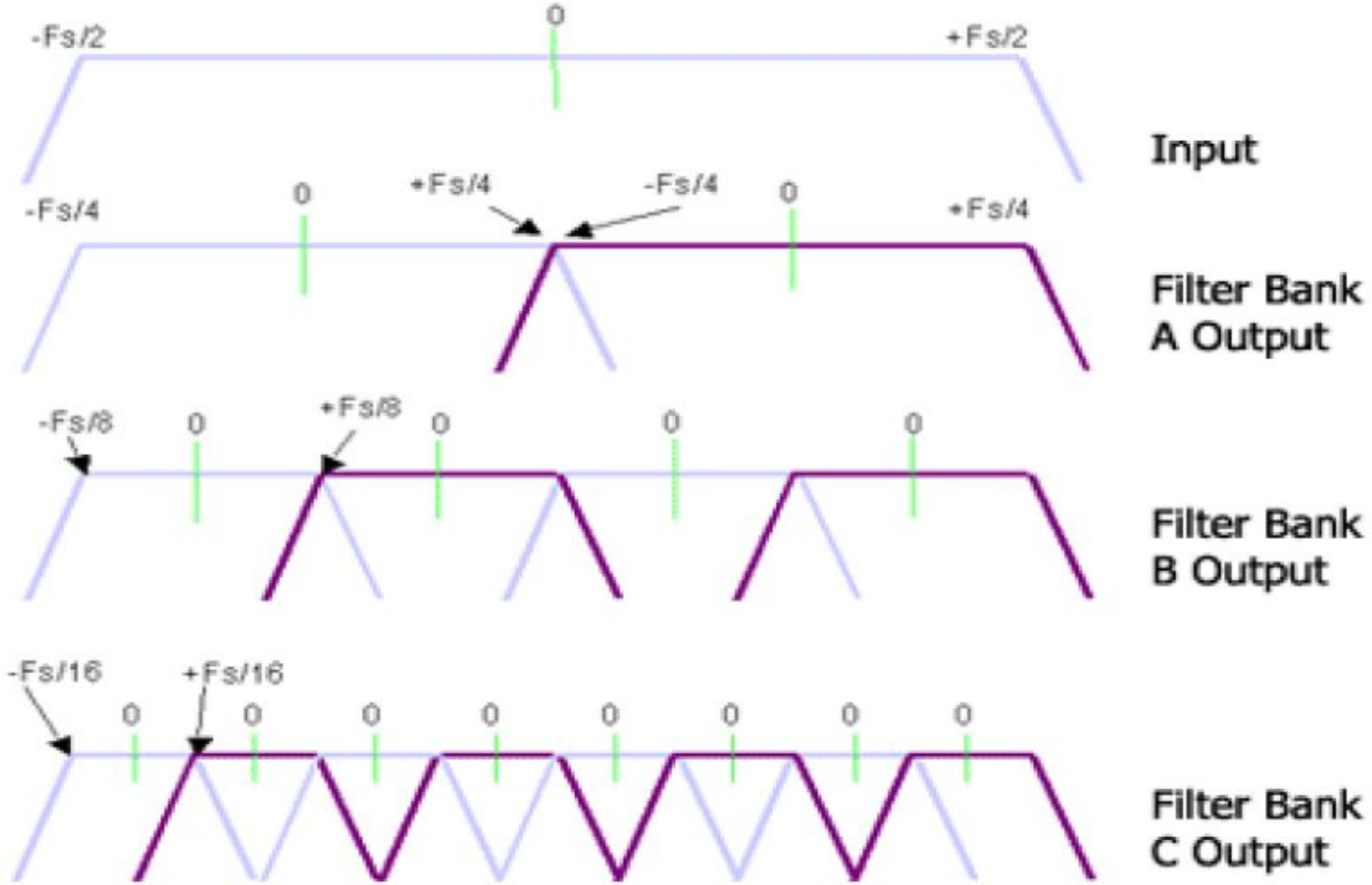

# 5 channels simulation

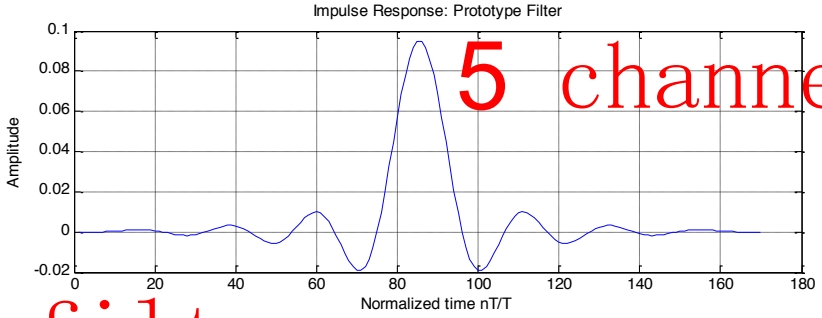


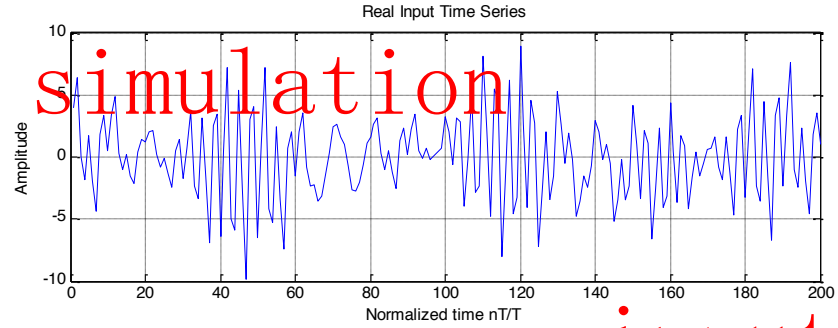


filter

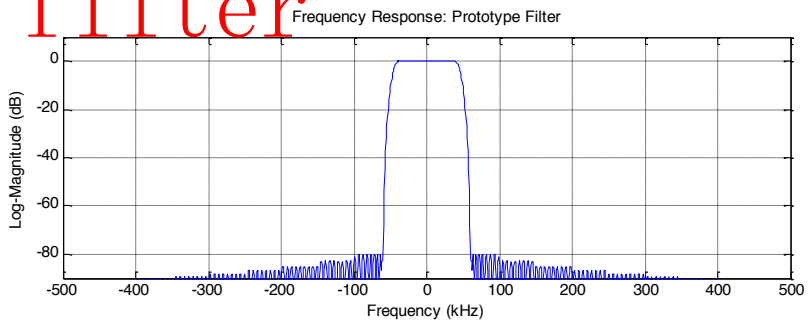


input

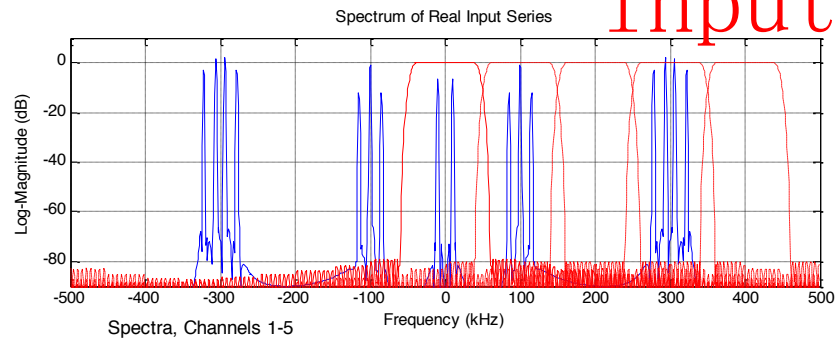


Channelation

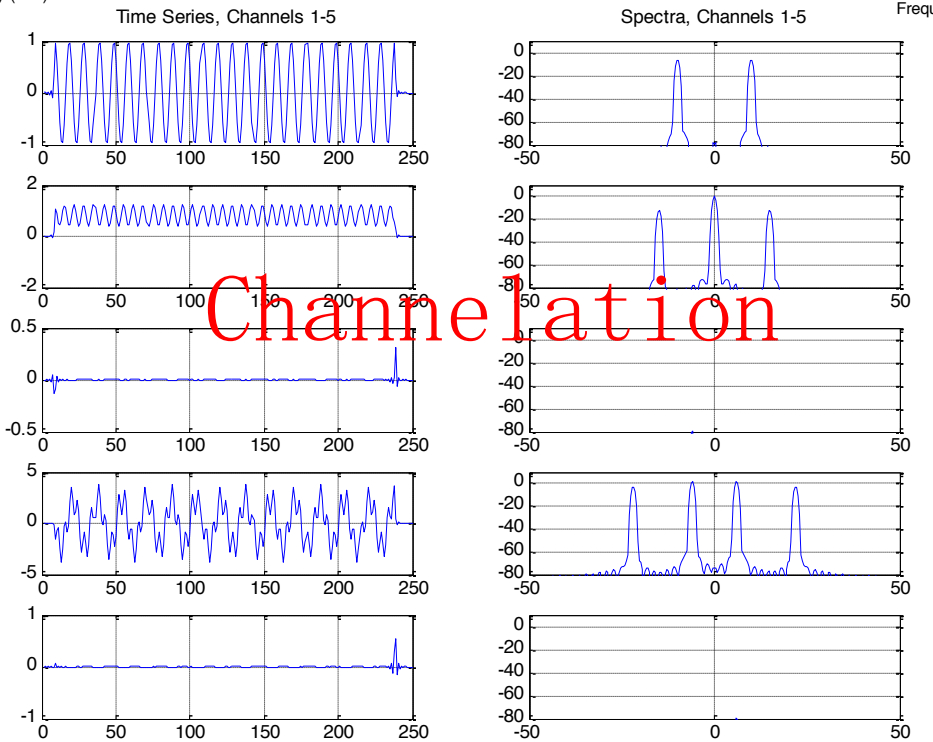

# Structure Scheme

- frequency-spatial beamforming(FS)

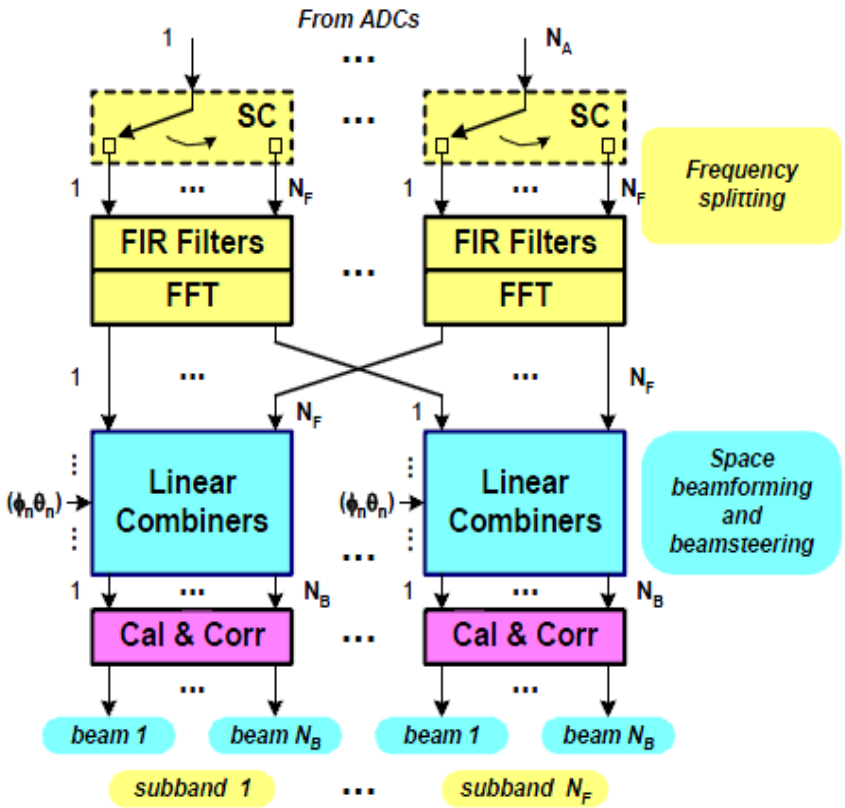


- spatial-frequency beamforming(SF)

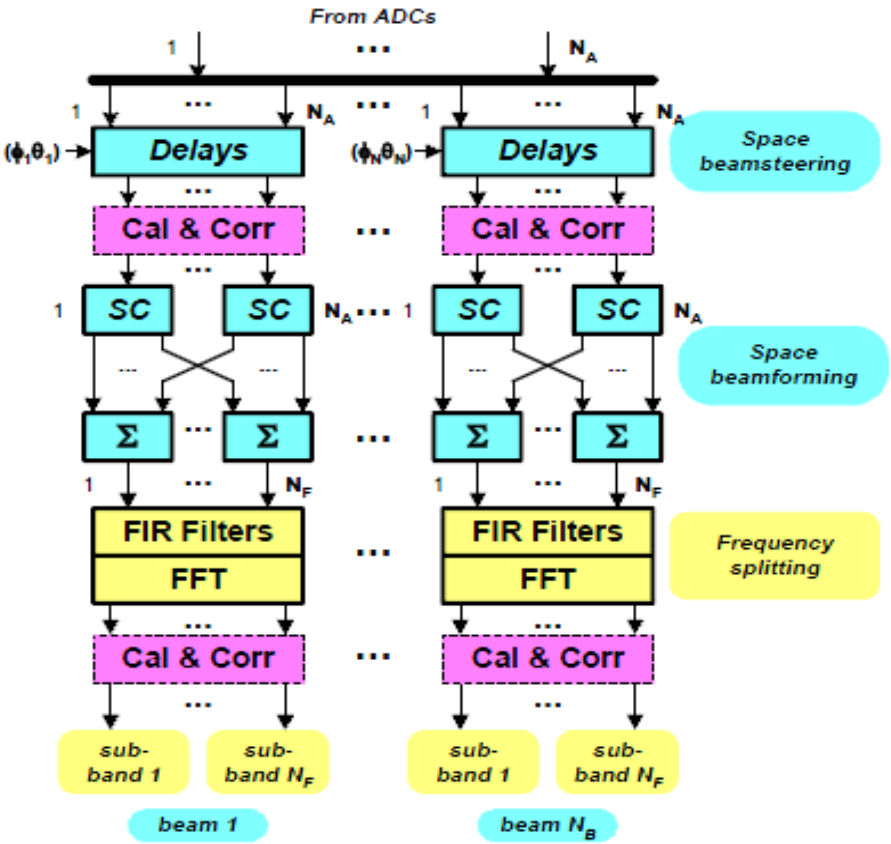

Compare:

FS

- $M_{FS1} = O\{2N_A N_F \log_2 N_F\}$
- $M_{FS2} = O\{4N_B N_A N_F\}$
- $M_{FS} = M_{FS1} + M_{FS2} = O\{2N_A N_F(\log_2 N_F + 2N_B)\}$
- For SKA-1: SF-Beamforming is cheaper by a factor of 1000

---

SF

- $M_{SF1} = O\{N_A N_B\}$
- At the second "frequency" stage of processing, the FS-beamformer should perform about
- $M_{SF2} = O\{2N_B N_F \log_2 N_F\}$
- real multiplications. The total number of operations is
- $M_{SF} = M_{SF1} + M_{SF2} = O\{N_B(N_A + 2N_F \log_2 N_F)\}$

# SKA Array Calibration

- ➢ Different from traditional radio telescope calibration
- Individual antennas 'see' the entire observable sky
- The dish-centric concept of Field of View (FoV) at the antenna level is not valid
- Each individual element does not have the sensitivity to detect astronomical sources

- ➢ Array calibration method
- ✓ correlation
- calibrate off strong signal method (use the existing beamformer)

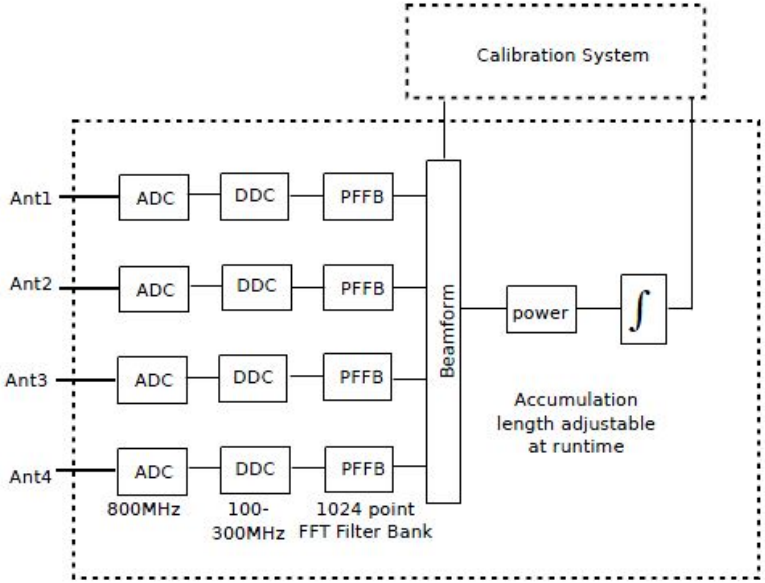

# SKA Digital Beamforming algorithm

- DFT beamforming
- Gridding+FFT beamforming
- Hierarchical, two-stage Beamforming

相控雷达 、声呐
自适应数字波束合成算法

DFT Beamforming

$$y_k[n] = \mathbf{w}_k^H \mathbf{x}[n],$$

$$\mathbf{w}_k = \left[\alpha_0, \alpha_1 e^{-j\varsigma_k}, \cdots, \alpha_{M-1} e^{-j(M-1)\varsigma_k}\right]^T,$$

$$\varsigma_k = \frac{2\pi f_0 d}{c} \sin\theta_k. \text{ This can be written :}$$

$$y_k[n] = \sum_{m=0}^{M-1} \alpha_m x_m[n] e^{-jm\varsigma_k}.$$

- Now let $\varsigma_k = k2\pi/M$ and solve for $\theta_k$.
- This looks like a DFT across sensor channels!
- Frequency = Direction!

| Beamforming Scheme | Operation Count |
|---|---|
| Single Level DFT | 16 TOP/s |
| Gridding + FFT | 5.2 TOP/s |
| Hierarchical 2-level + DFT | 320 GOP/s ✓ |

# SKA Digital Beamforming Hardware selection

- ➢ Digital processing devices options
- • ASIC
- ✓ FPGA
- • DSP
- ➢ CASPER (Center for Astronomy Signal Processing and Electronics Research)
- • IBOB (2005, Xilinx Virtex-II)
- • BEE2 (2005, Xilinx Virtex-II)
- • ROACH (2009, Virtex 5)
- • ROACH2 (2010, Virtex 6)
- • ROACH2 Revision (2012, Virtex 6)
- • Smart Network ADC Processor (2014, Kintex7)

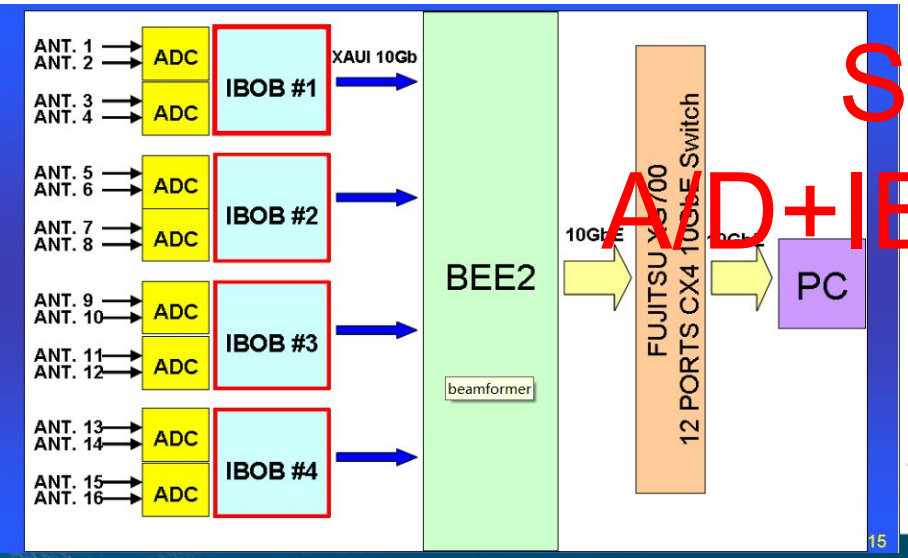


SKADS
A/D+IBOBs+BEE2

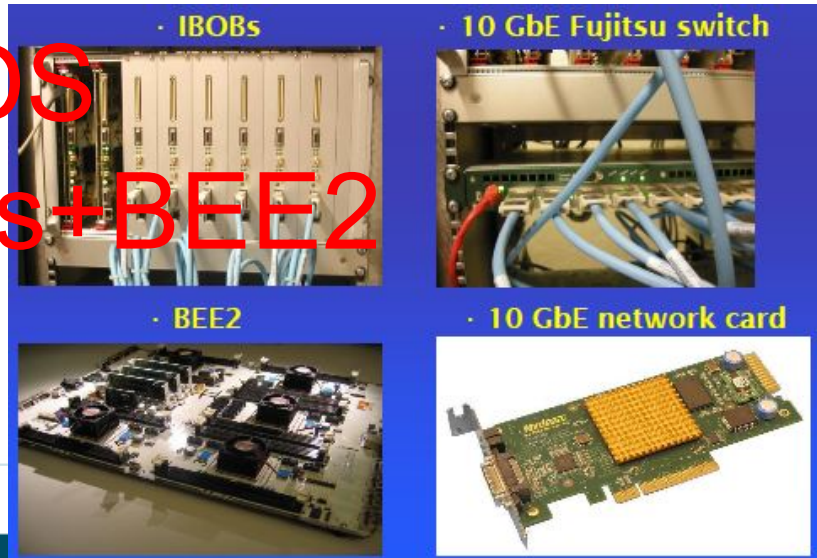

# A controlled fractional delay filters digital beamforming

- Integer delay+fraction delay
- Fractional sampling interval delays is the key to accurate delay

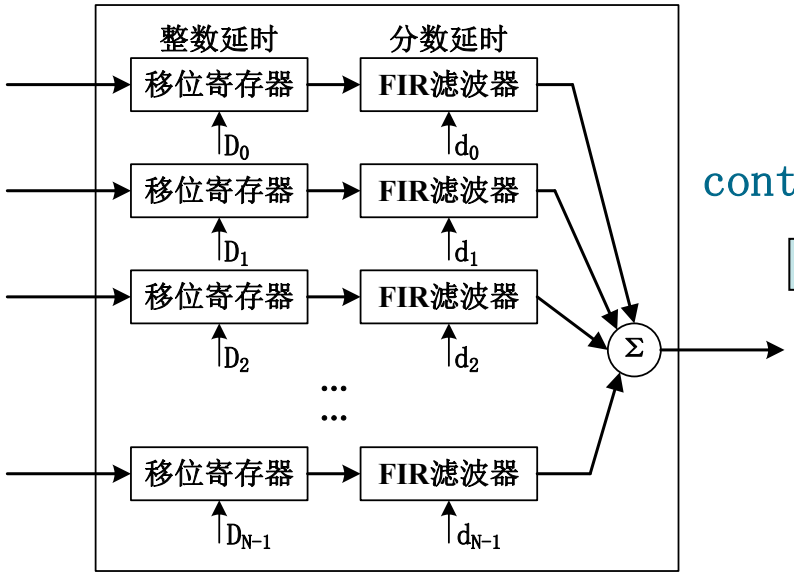


beamforming

controll delay

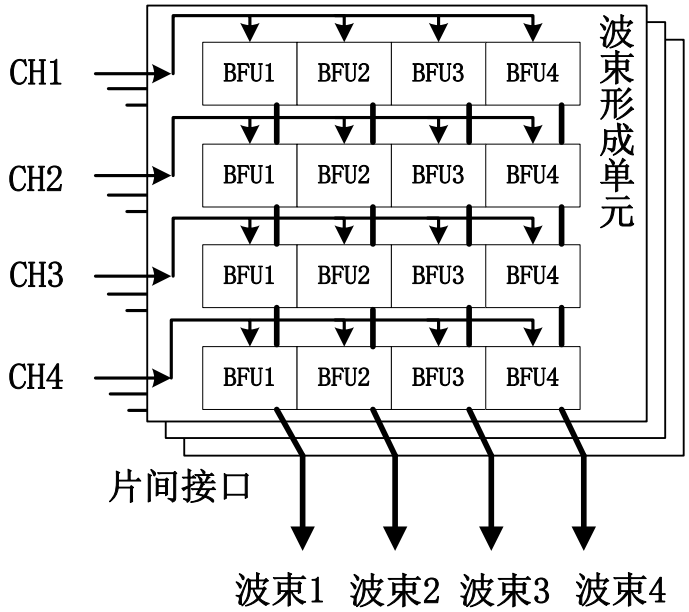


multi-beamforming




in construction


两个接收单元各19面天线
数字多波束改造

# Future Works

- Simulation (MATLAB, Simulink+FPGA)
- Use 21CMA system to validate
- Astronomical finance special.
- SKA simple dual beam validate system

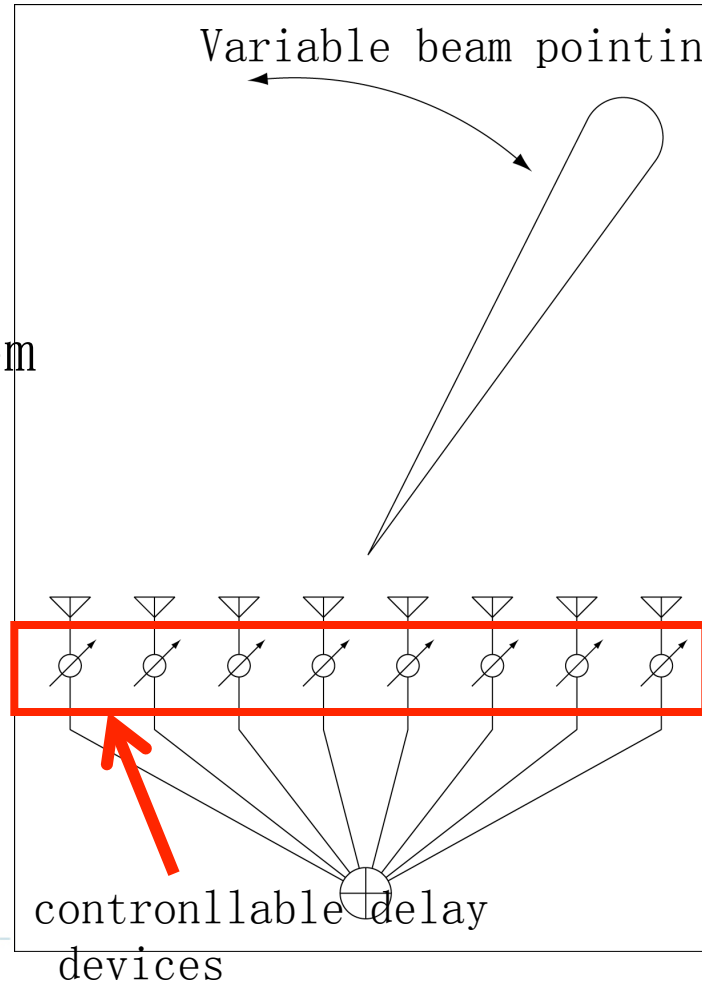

# Thank You!