β-delayed spectroscopy at ALTO

Clément Delafosse

Laboratoire des 2 infinis
Irène Joliot-Curie

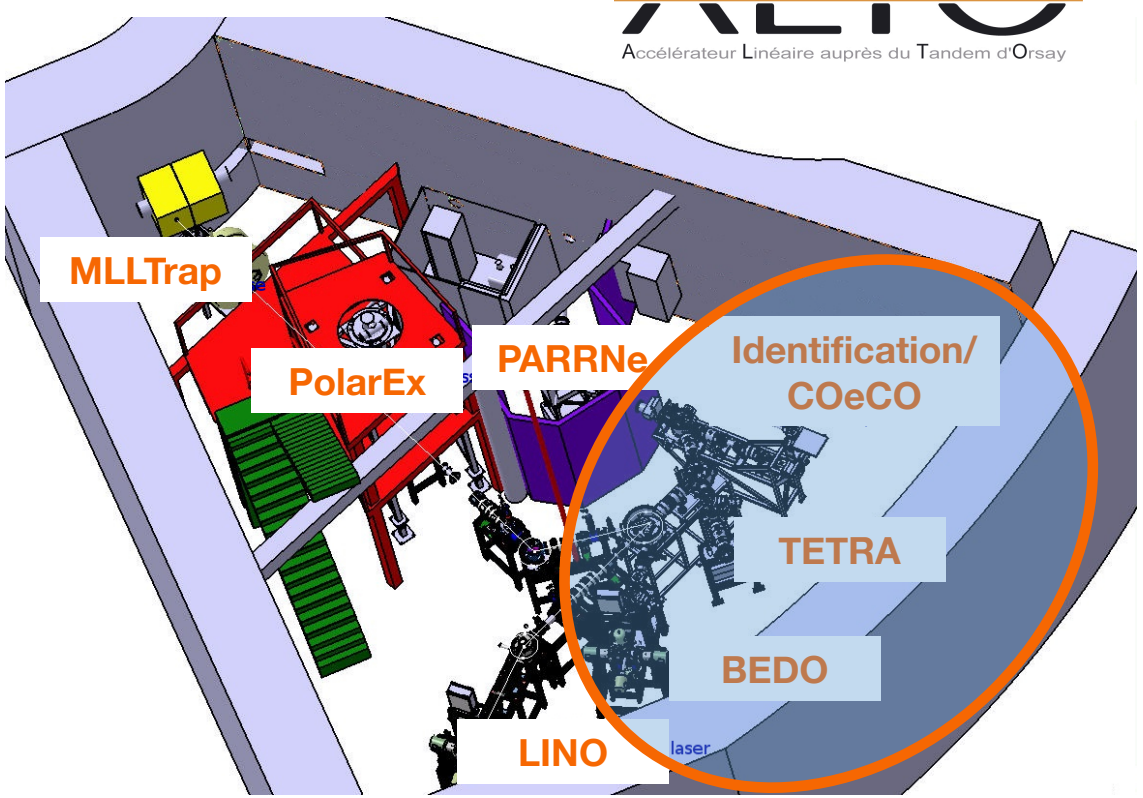

Master project
BESTIOL

Sommaire

- Introduction
- Tape stations
- BEDO : a modular decay station
- Neutron counting with TETRA
- Conclusion

Introduction

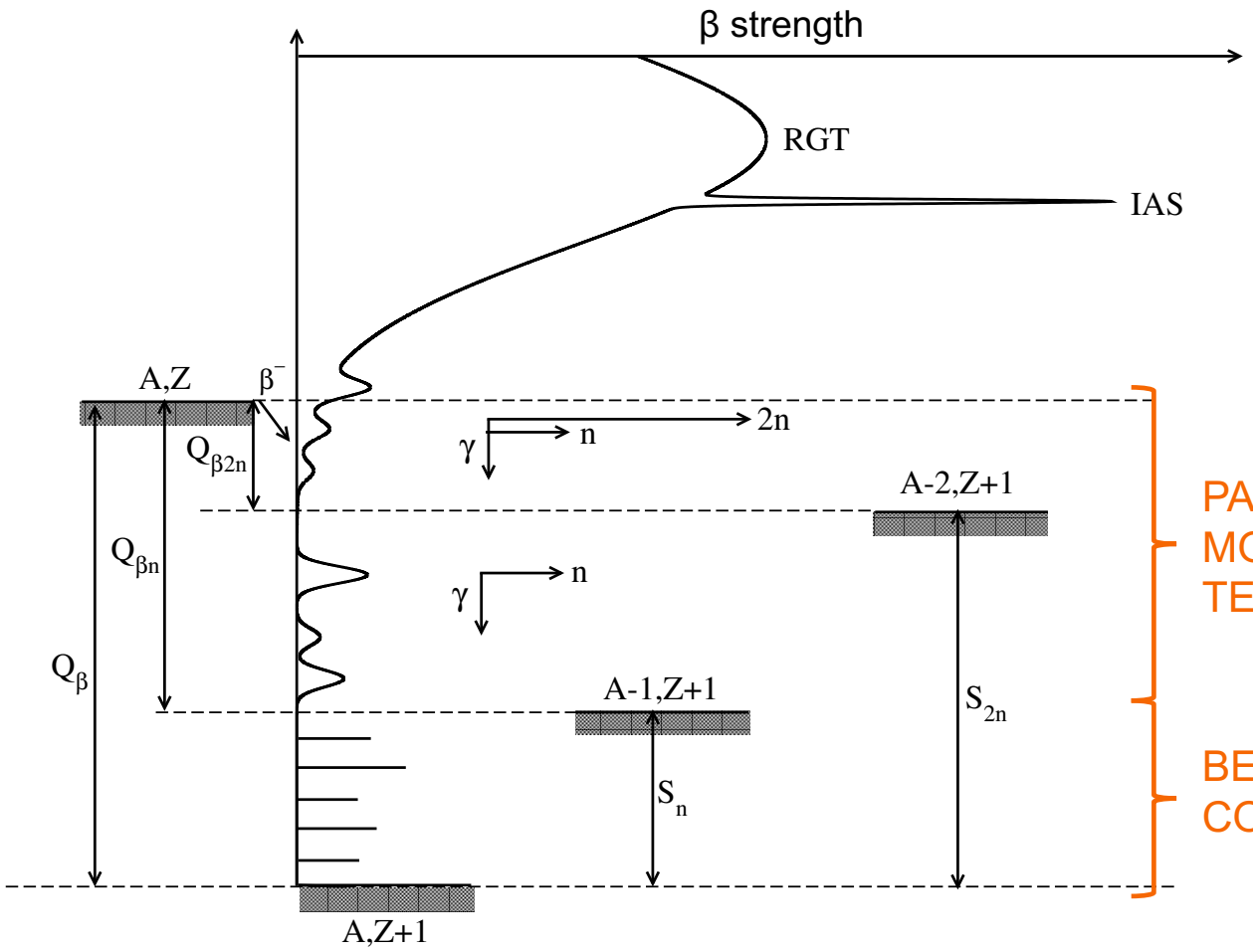

Purpose of β^- decay setups in ALTO :

- Detect every decay products (e^-, γ, neutrons)
- Measure their energy
- Cover the full Q_β energy range

PARIS@BEDO (see L. Al Ayoubi and R. Li's talk)
MONSTER@BEDO
TETRA

BEDO
COeCO (see G. Tocabens' talk)

Moveable tape-based setups

Radioactive source built by collecting the beam on a Al-coated mylar tape

3 main purposes :
- Limiting the daughters activity in the spectra
- Giving a time pattern to the measurement
- Bringing the source from collection point to measurement point when different.

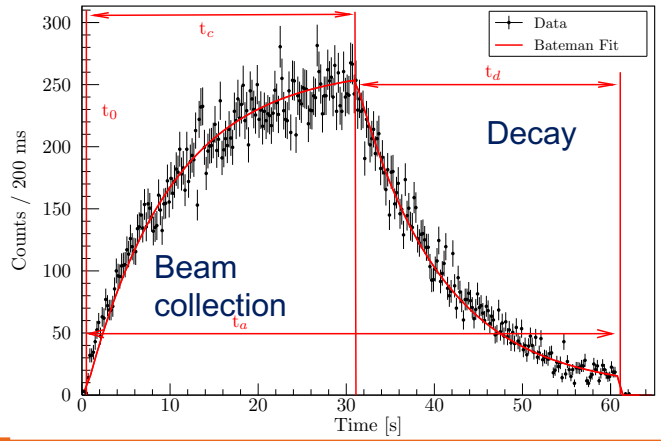

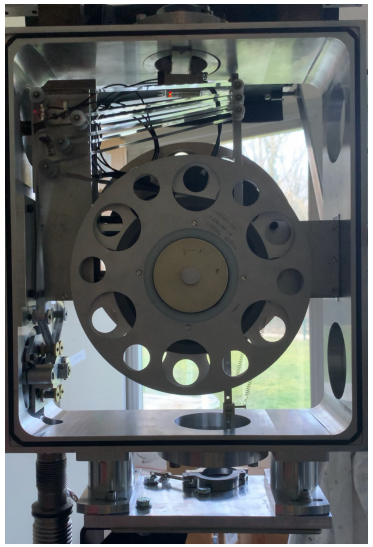

Historical Pierre Paris' (70s-80s) tape station still in use

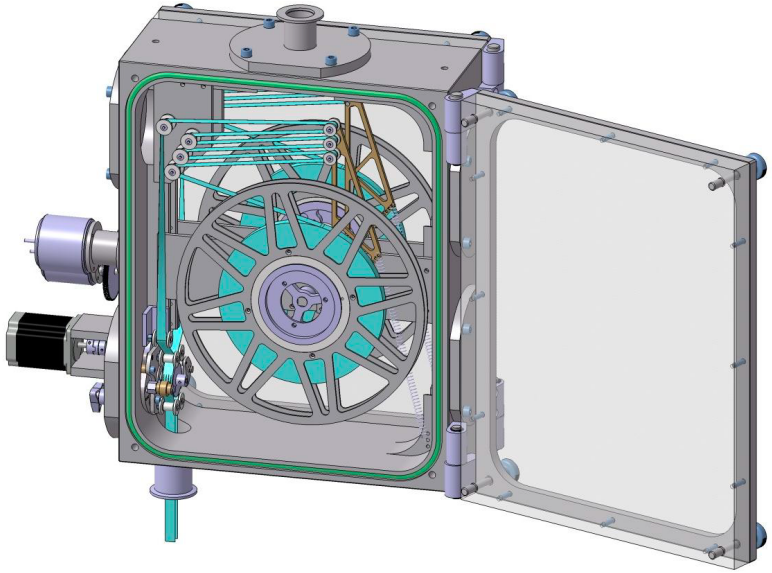

New tape station (L. Vatrinet, IJCLab) tested in December 2019

A second one under construction

Tape station control system also controls beam delivery and DAQ system.

Tape station project manager : L. Vatrinet (IJCLab)
Automate project manager : F. Didierjean (IPHC)

BEDO : A modular decay station

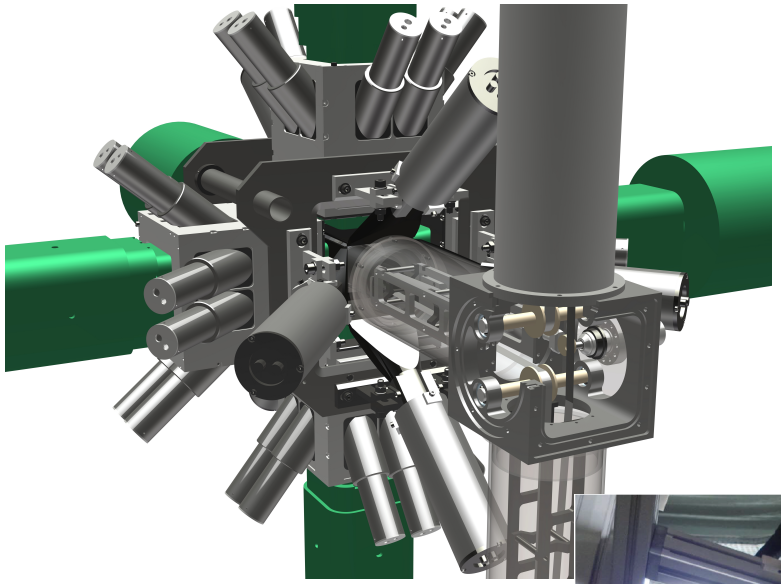

Fast timing mode

- Lifetime of excited states
- Level scheme
- Branching ratios
- Log ft

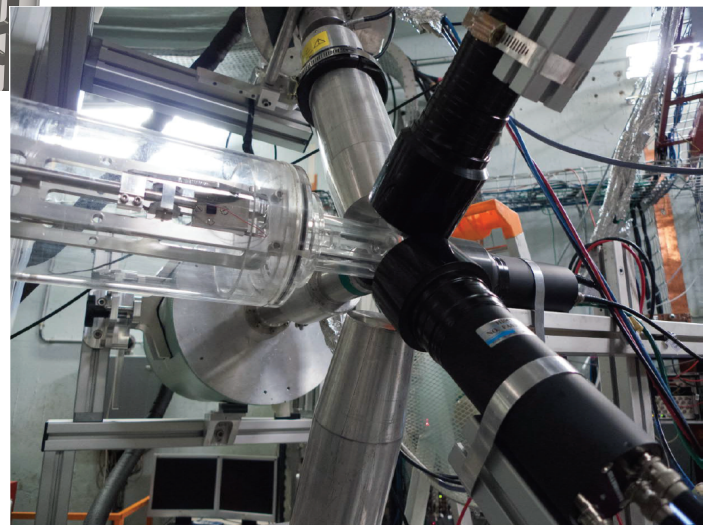

γ spectroscopy mode

- Level scheme
- Branching ratios
- Log ft

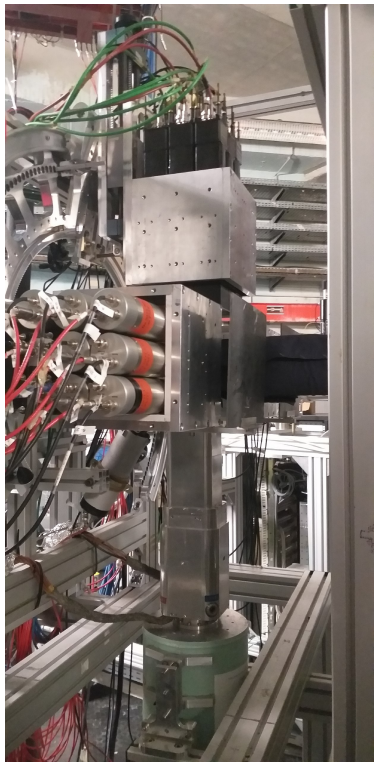

PARIS@BEDO

See L. Al Ayoubi's and R. Li's presentations

MONSTER@BEDO

- Neutron spectroscopy
- Structure above S_n

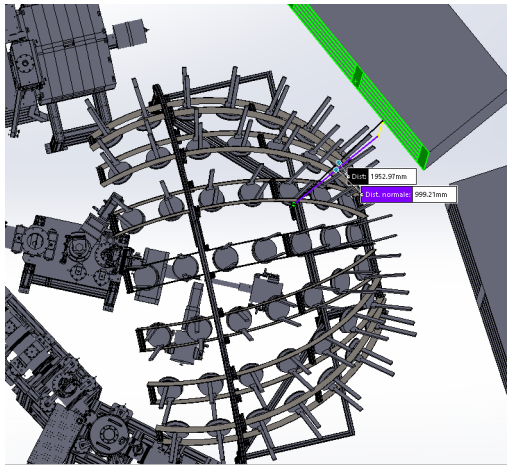

BEDO β-delayed γ-spectroscopy mode

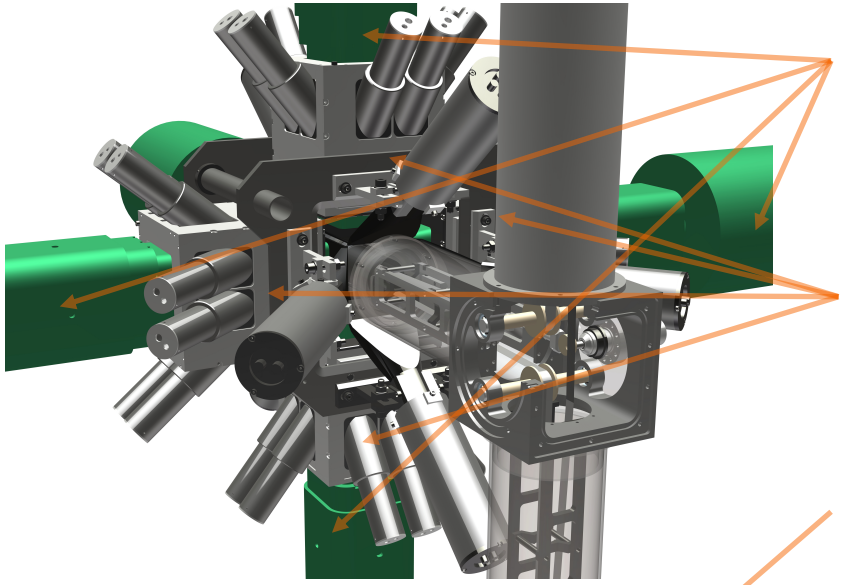

4 HPGe CLOVERS (EUROGAM-like) or coaxial

BGO anti-Compton shields

Cylindrical plastic scintillator (β-tagging)

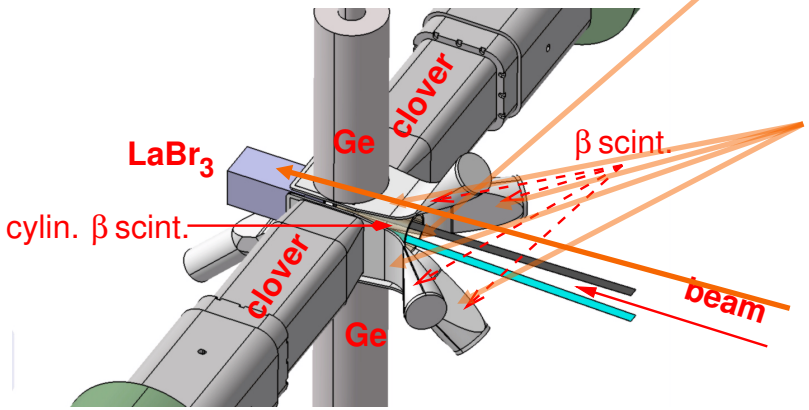

Plastic scintillators

Extra detector (Ge,$LaBr_3$, X junction)

A. Etilé et al., PRC 91,064317 (2015)

BEDO β-delayed γ-spectroscopy mode : a highlight

Importance of serendipity and luck allowed in ALTO

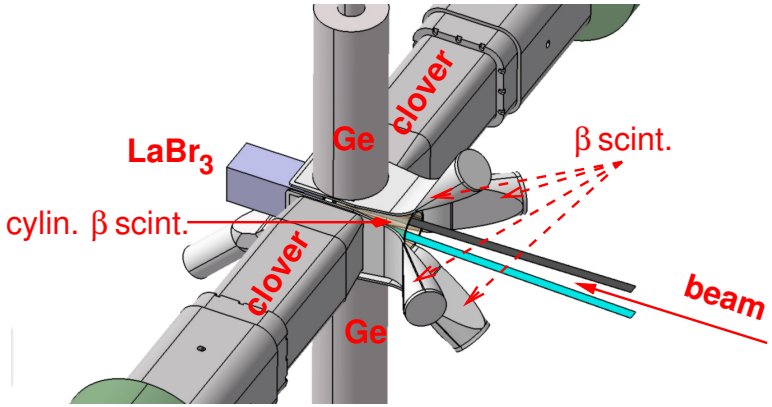

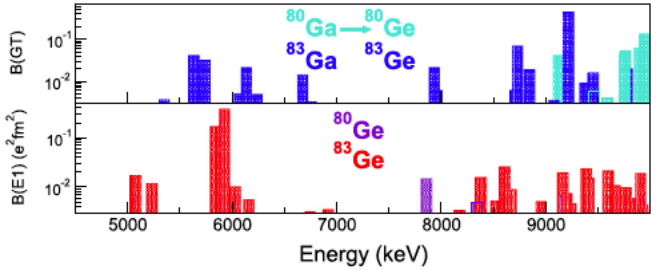

A. Gottardo et al. PLB 772C pp 359-362 (2017)

$LaBr_3$ spectrum for $^{80,83}Ga$ taken during the same experiment

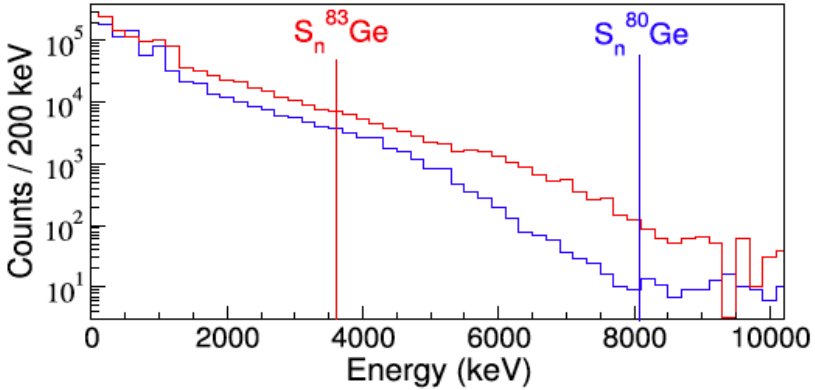

Leads to a new physics program in ALTO on PDR triggered by β-decay (see L. Al Ayoubi's talk)

BEDO fast timing mode

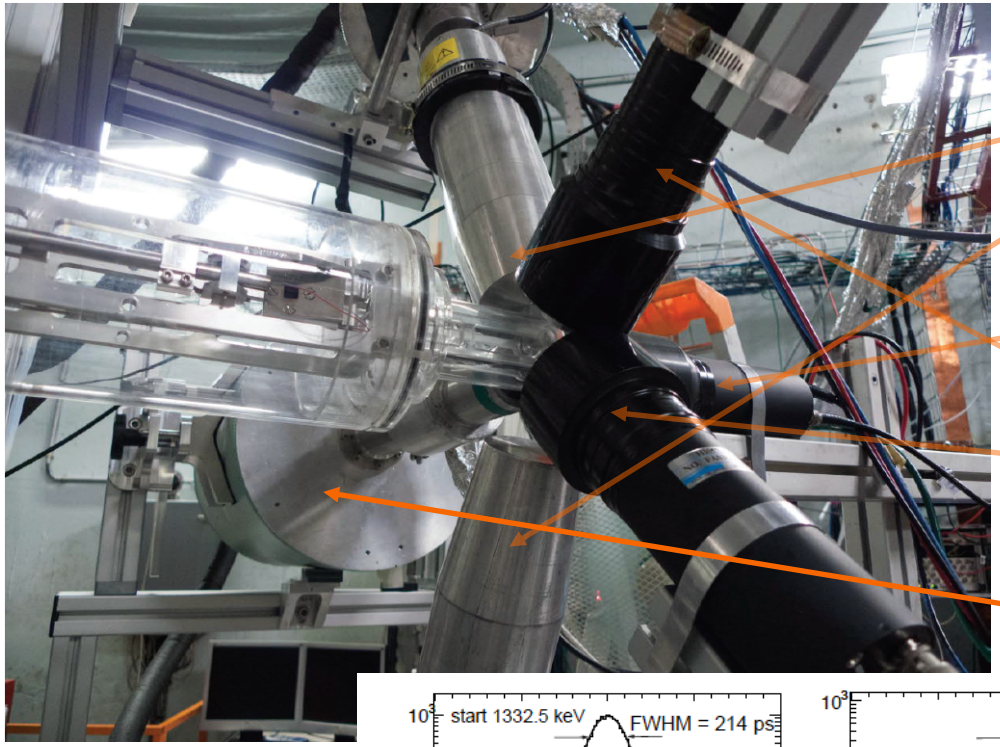

2 coaxial Ge detectors

Pilot U (β tagging)

2 small $LaBr_3$ detectors

1 planar Ge detector

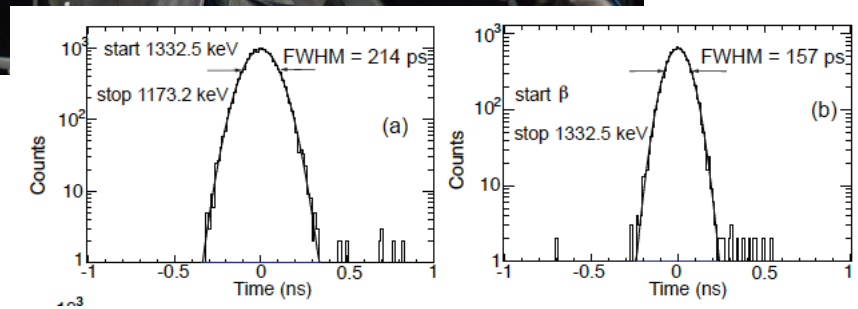

Time resolution obtained with ^{60}Co calibration source

+ 3 TAC modules between LaBr3 and Pilot U

B. Roussière et al. EPJ A 47, 106 (2011)
M.A. Cardona et al. PRC 103, 034308 (2021)

BEDO fast timing mode : a highlight

Lifetime measurements in neutron rich ^{145}La

Upper part of the level scheme obtained

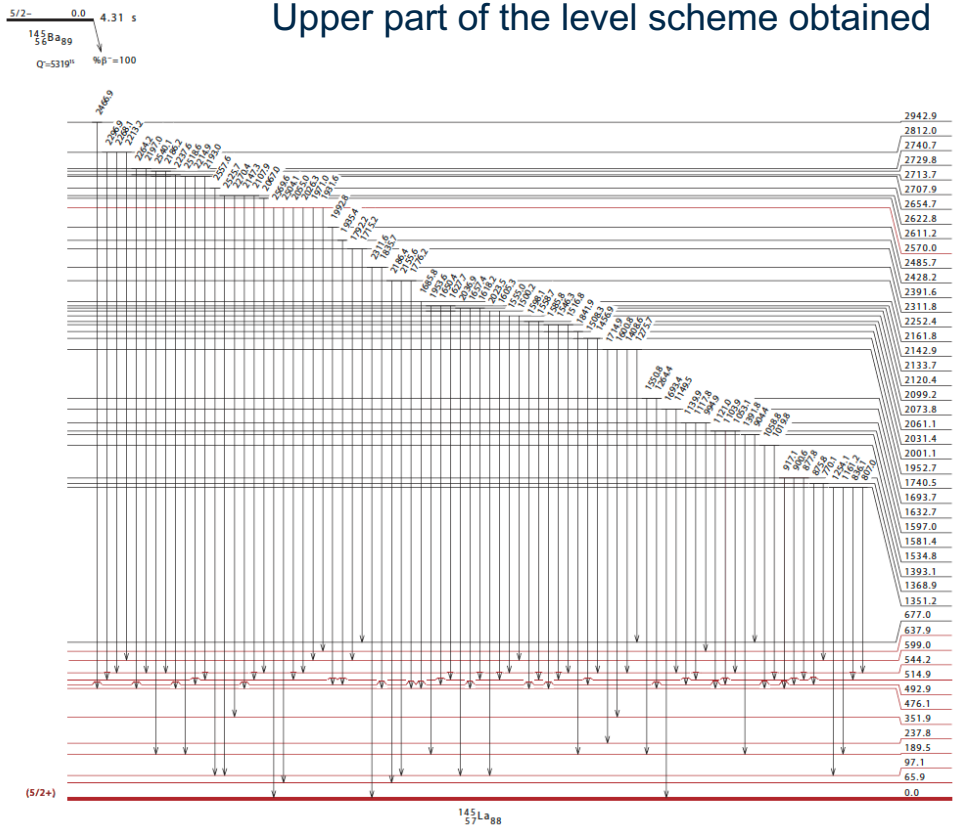

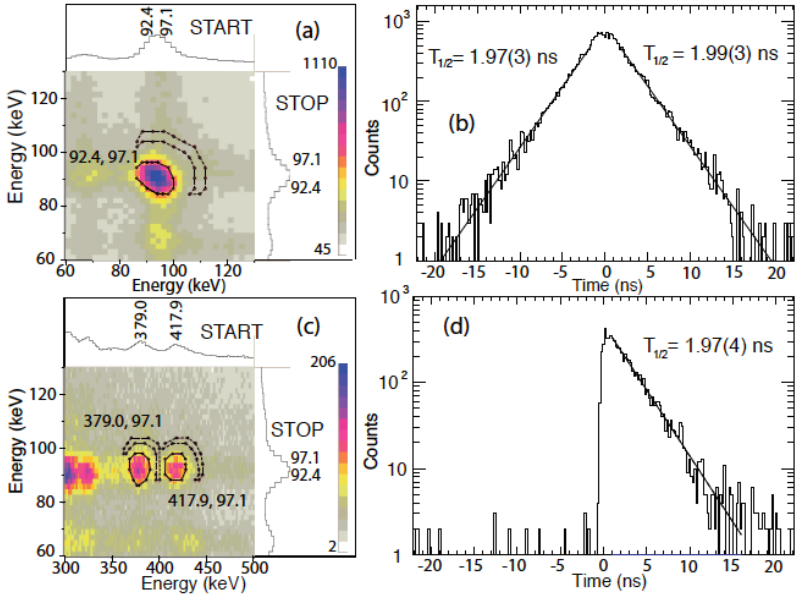

Lifetime measurements in order to address deformation/collectivity in the region

R&D program to produce neutron-rich rare earth beams *via* fluoration at ALTO

M.A. Cardona et al. PRC 103, 034308 (2021)

MONSTER@BEDO

Ciemat
Centro de Investigaciones Energéticas, Medioambientales y Tecnológicas

50 cells filled with BC501A liquids

Plastic scintillator (β tagging)

γ detectors (Ge, $LaBr_3$, PARIS)

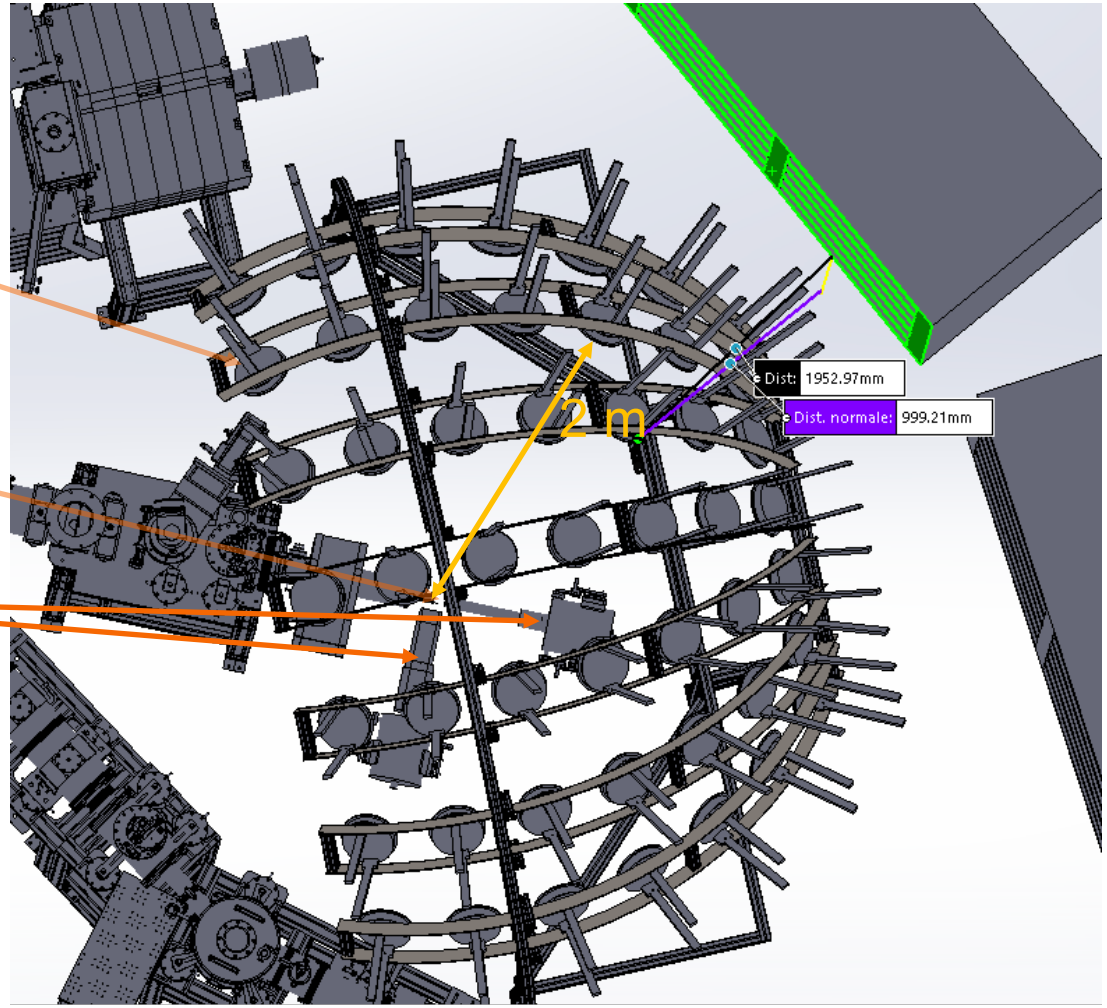

2 proposals for a campaign :

- ^{83,84}Ga and ^{133,134}In (SP : A. Gottardo, LNL Italy)
- ^{81}Zn (SP : I. Matea)

Neutron counting : TETRA

80 ^{3}He filled bars

Plastic scintillator (β tagging)

Ge detector

Polyethylen moderator

Borated polyethylen shield

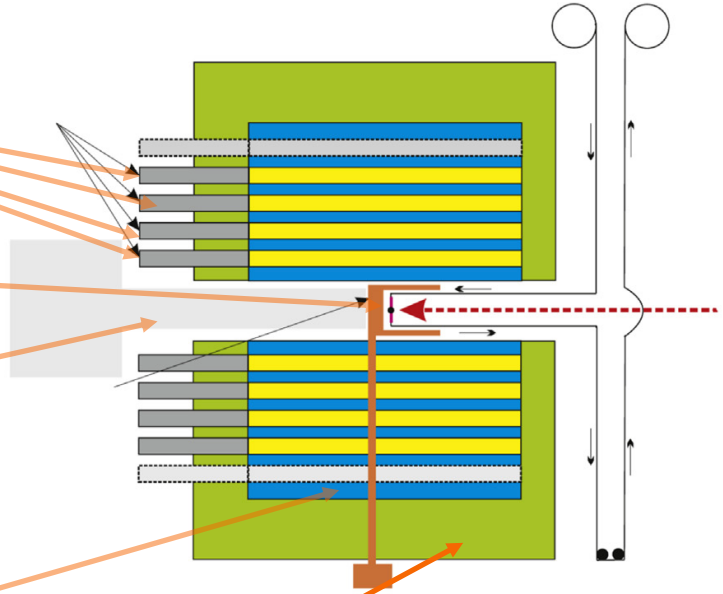

D. Testov et al. NIM A 815 pp. 96-103 (2016)

Advantages:

Destructive detection process (no crosstalk)
No energy threshold
High quasi constant efficiency (~60% up to 1 M)
Quasi transparent to γ

Drawbacks:

Almost no information on neutron energy
Slow detection time (neutron thermalisation)

Neutron counting : TETRA : a highlight

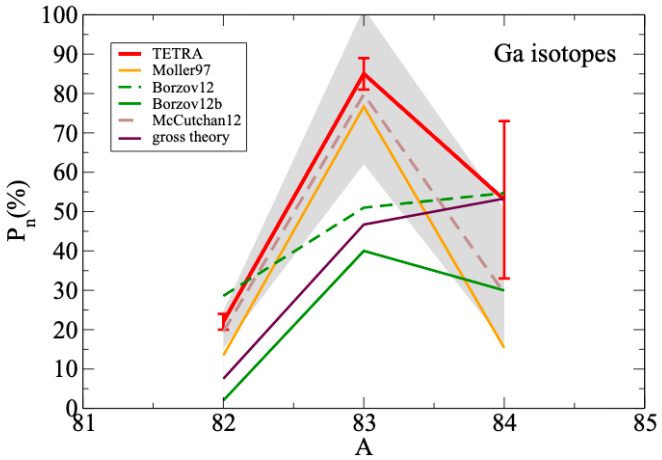

Measurement of P_n in neutron-rich Ga

D. Verney et al. PRC 95, 054320 (2017)

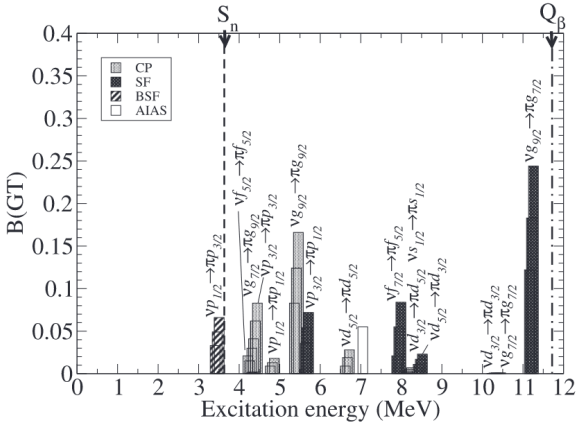

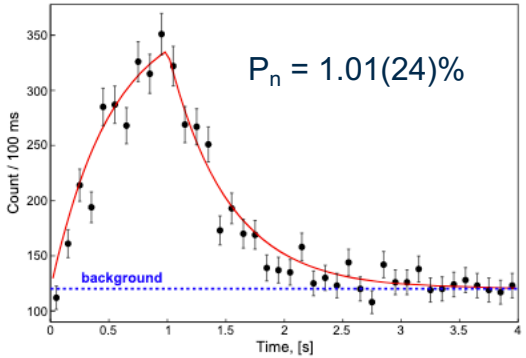

β-delayed neutron activity with a ^{123}Ag

D. Testov et al. EPJ A 57, 59 (2021)

Perspectives

- Commissioning of COeCO (G. Tocabens)
- Upgrade of tape station control system (F. Didierjean)
- Rejuvenation of TETRA DAQ system (M. Lebois)
- Rejuvenation of spectroscopy DAQ system NEW COMET (C. Delafosse)
- MONSTER@BEDO campaign (I. Matea)