Status of PIPERADE

From magnetron excitation to our first ToF-ICR

Mathieu Flayol

Outline

- Context of PIPERADE
- How to trap ions
- Quick introduction on Penning Traps
- Magnetron resonance
- Buffer Gas Cooling Technique (New !)
- ToF-ICR (New !)
- Conclusion

Why do we develop PIPERADE ?

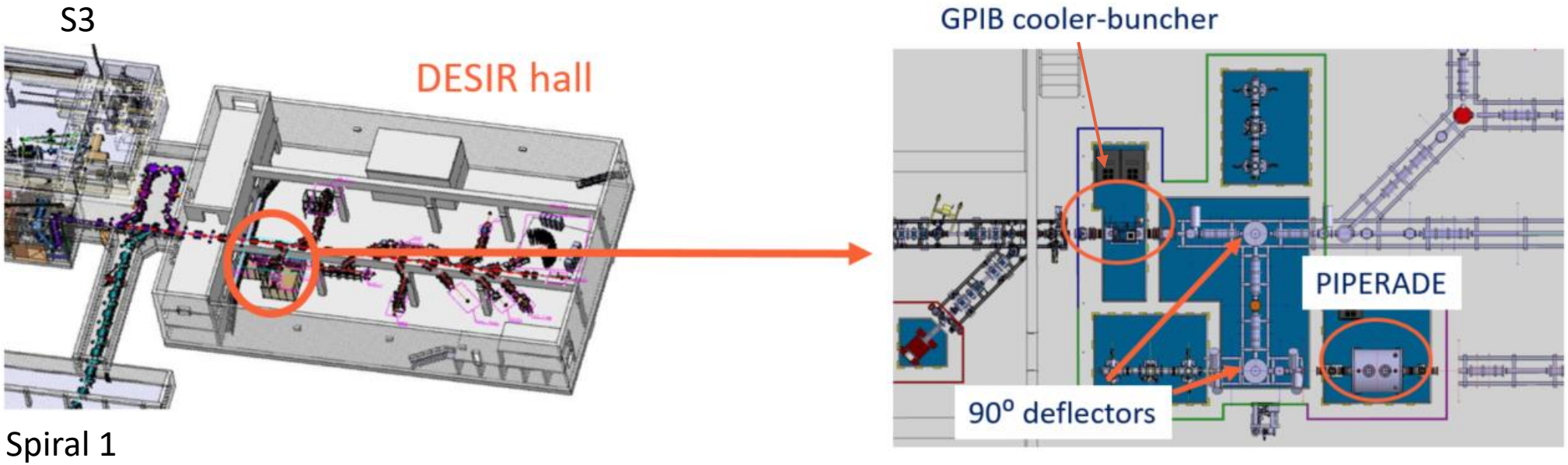

- High-resolution purification of isobars (or isomers)
- High-precision mass measurements of exotic nuclides

PIPERADE at CENBG

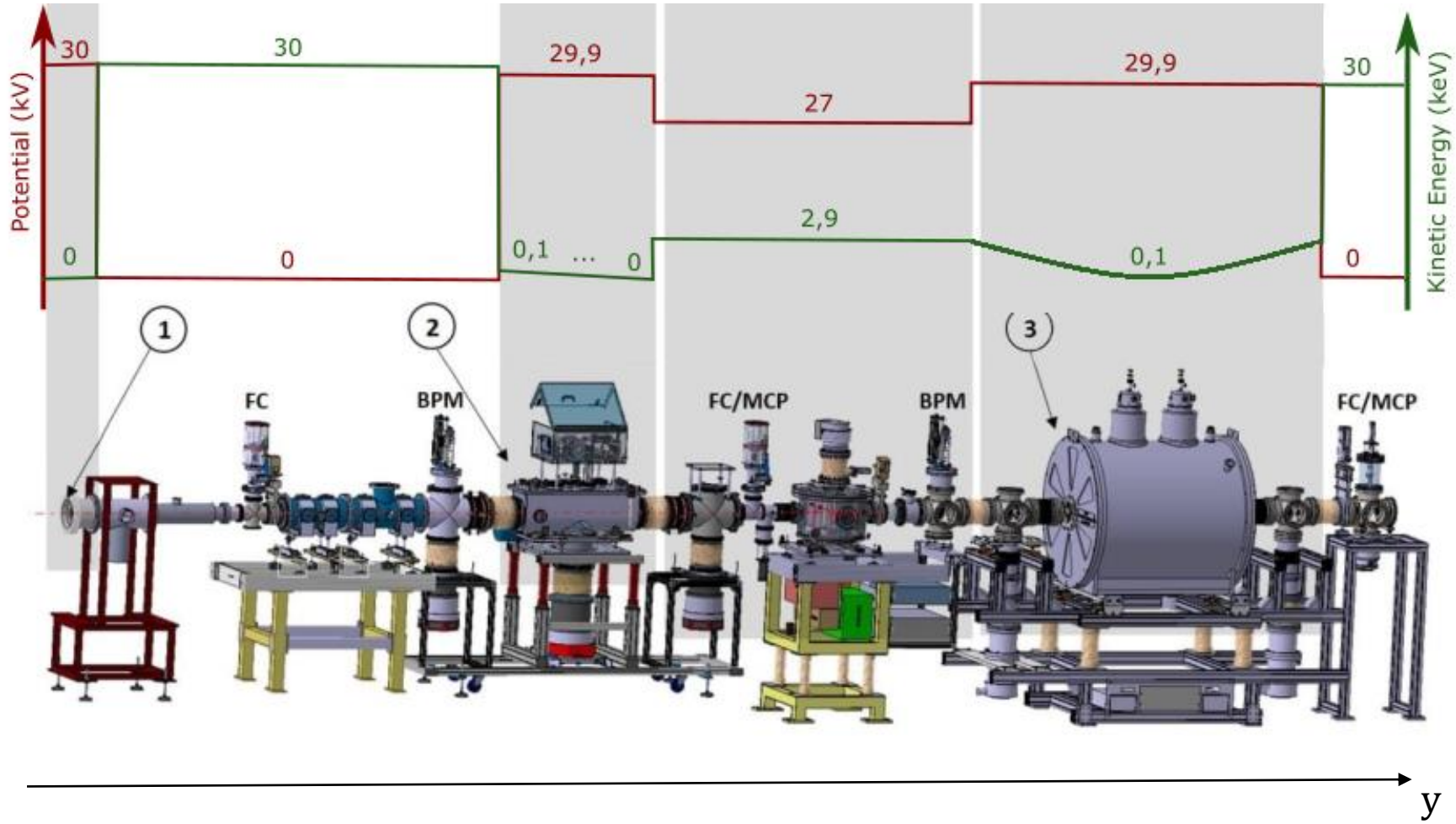

1. Surface ionisation source
2. General Purpose Ion Buncher(GPIB)
3. Penning traps (PIPERADE)

About the deflector

- New Kimball source is being characterised
- Ru ions, 0 to 5 keV, 0 to few uA
- Test bench for GPIB and PIPERADE diagnostics
- MCP, FC and emittance meter
- ToF, Energy, emittance longitudinal and radial
- Test of the deflector at 0° and 90°

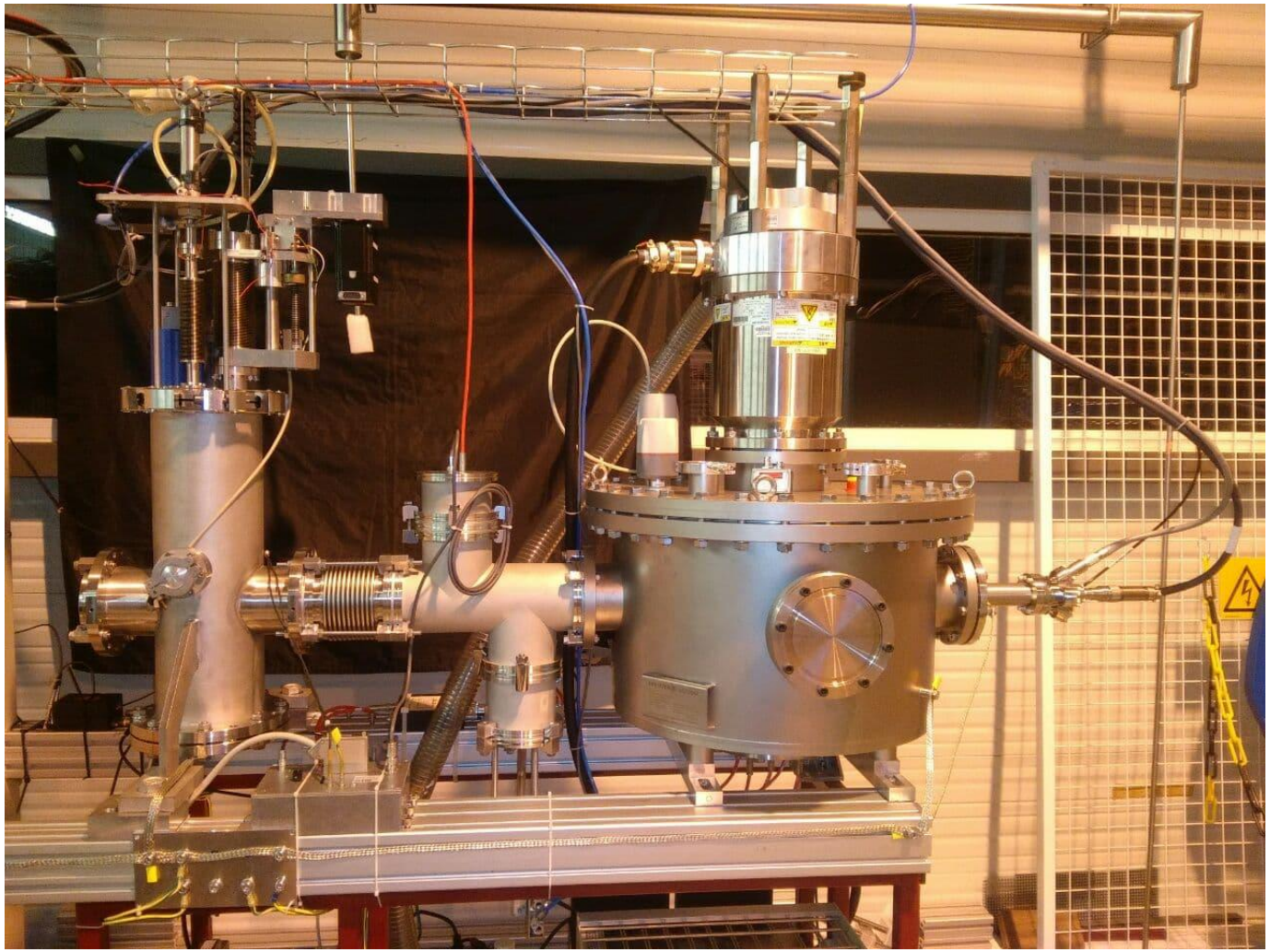

How do we trap Ions ?

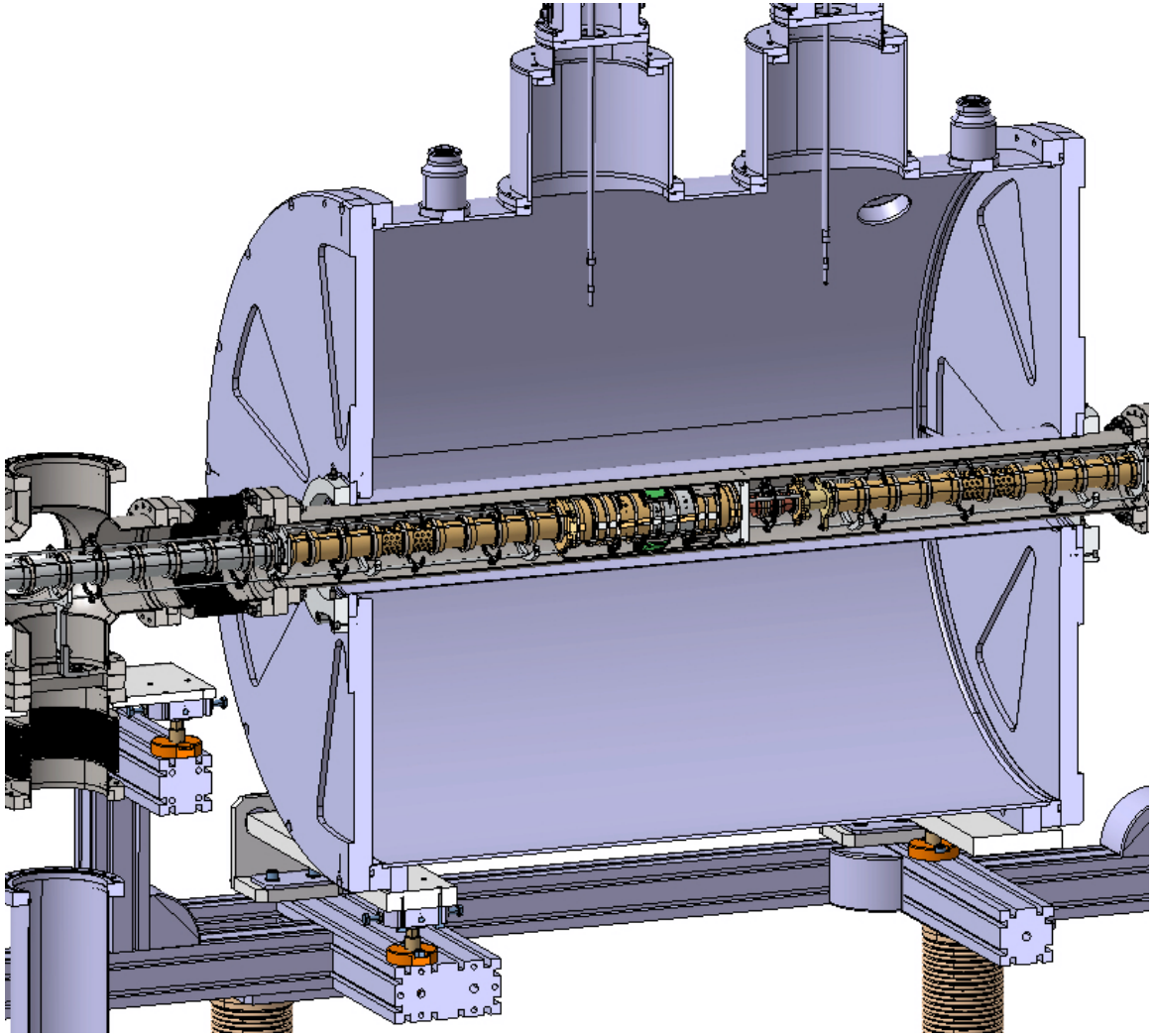

How do we trap Ions ?

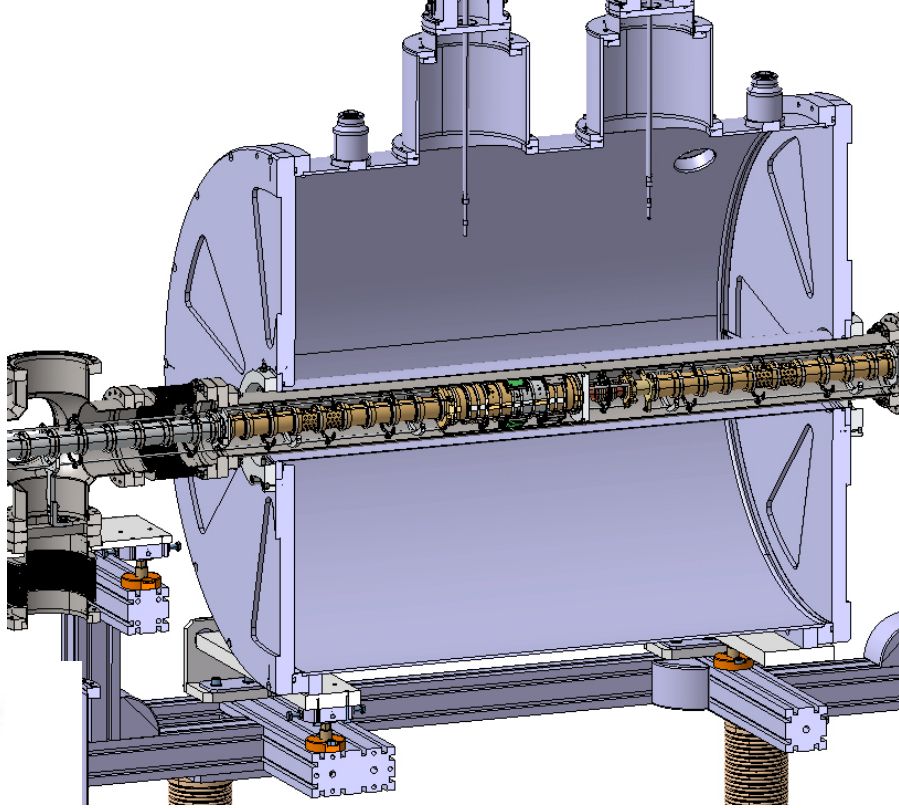

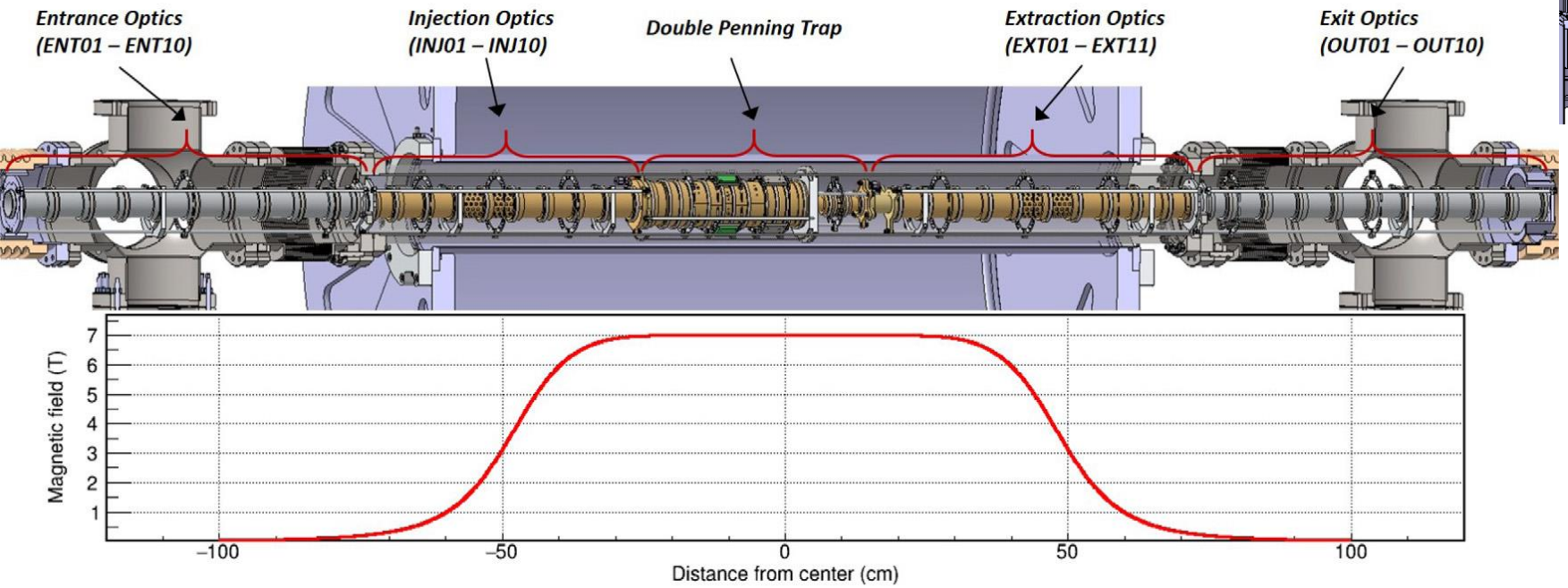

How do we trap Ions ?

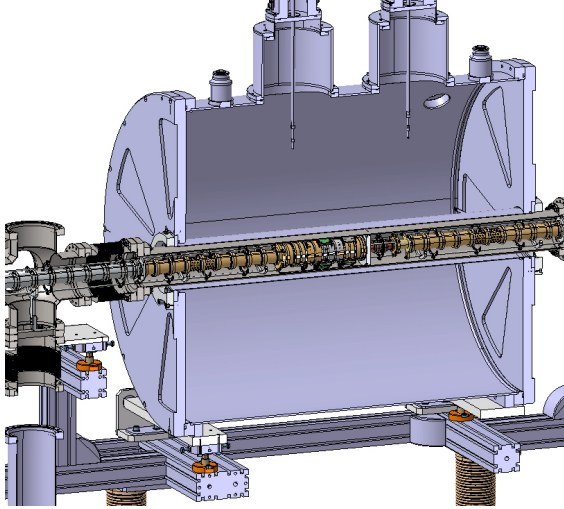

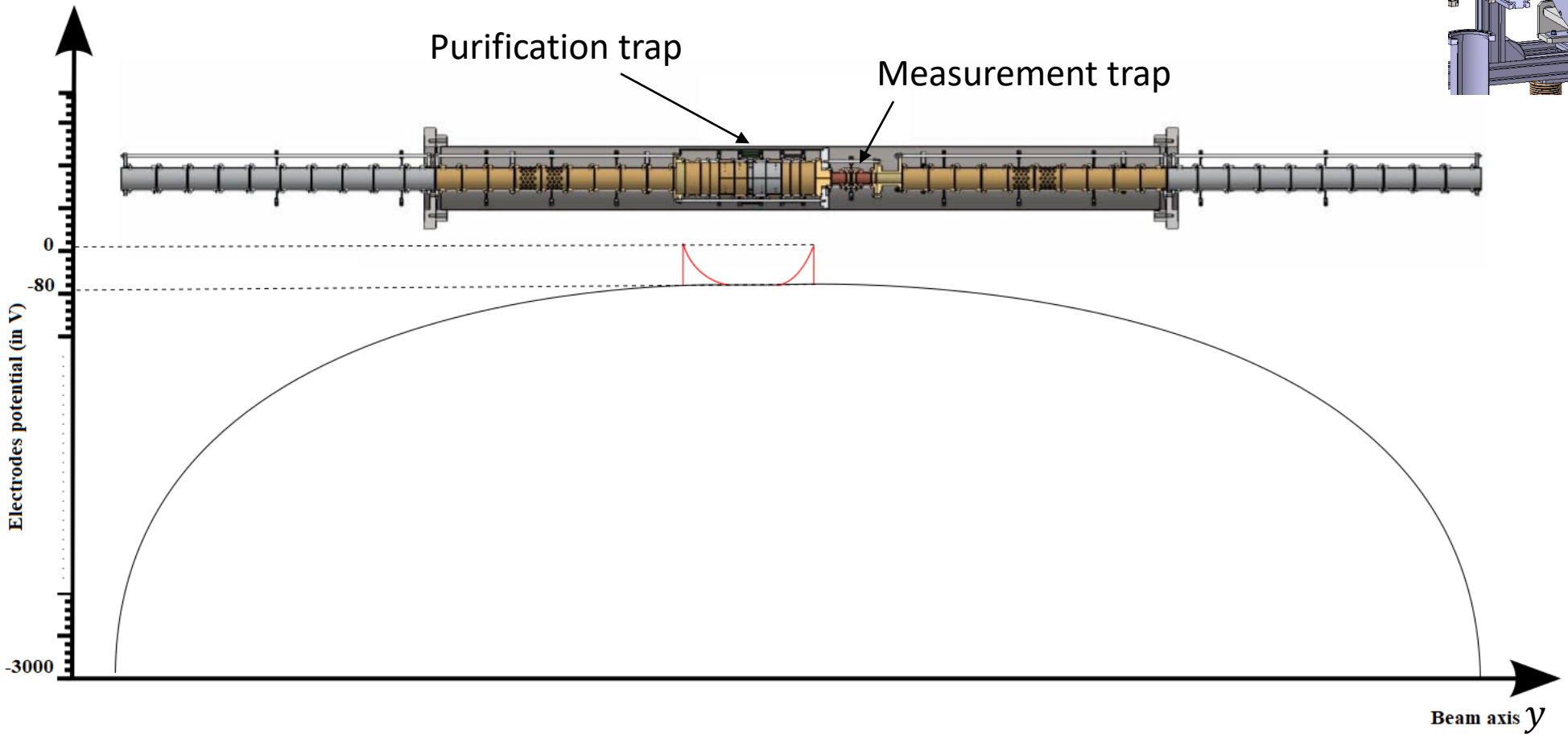

How do we trap Ions ?

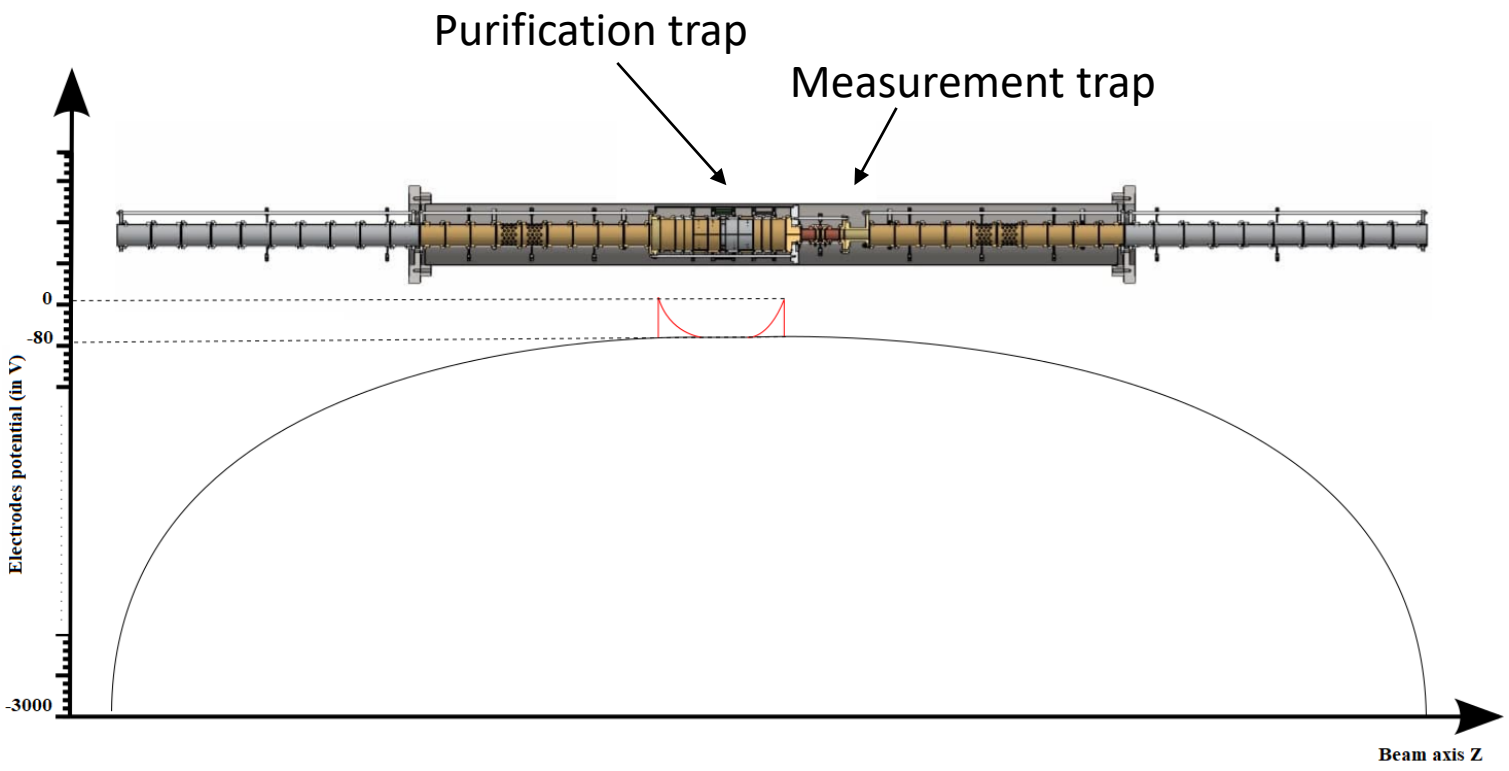

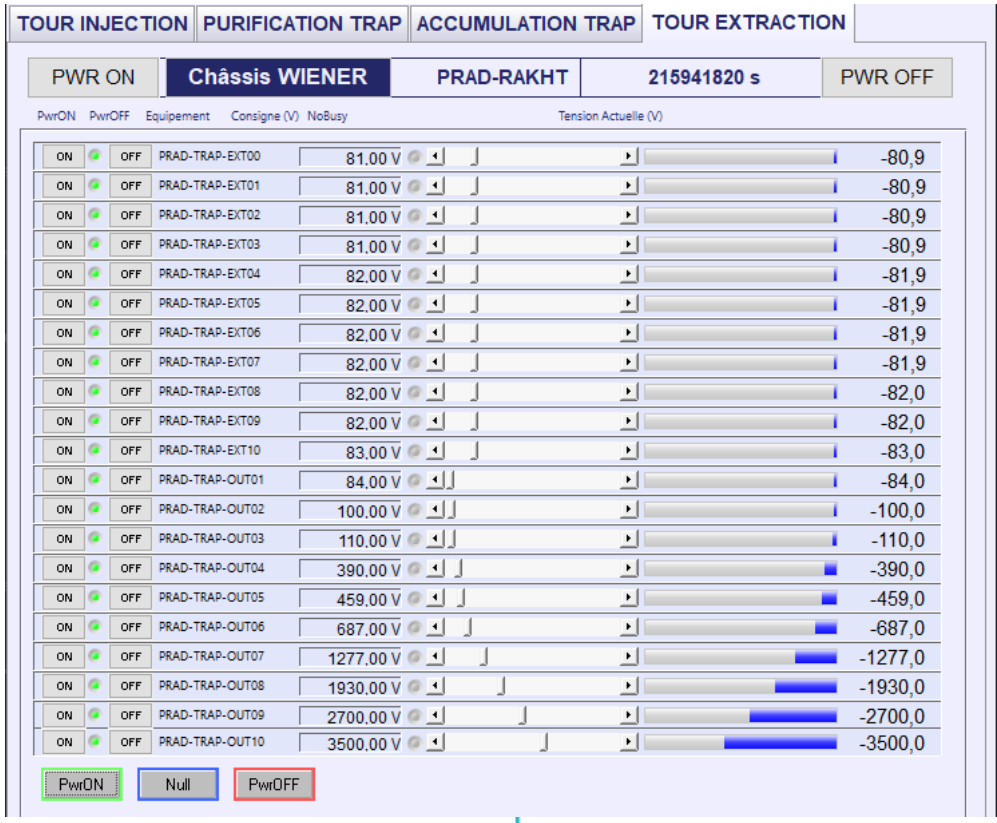

Double Penning trap of PIPERADE

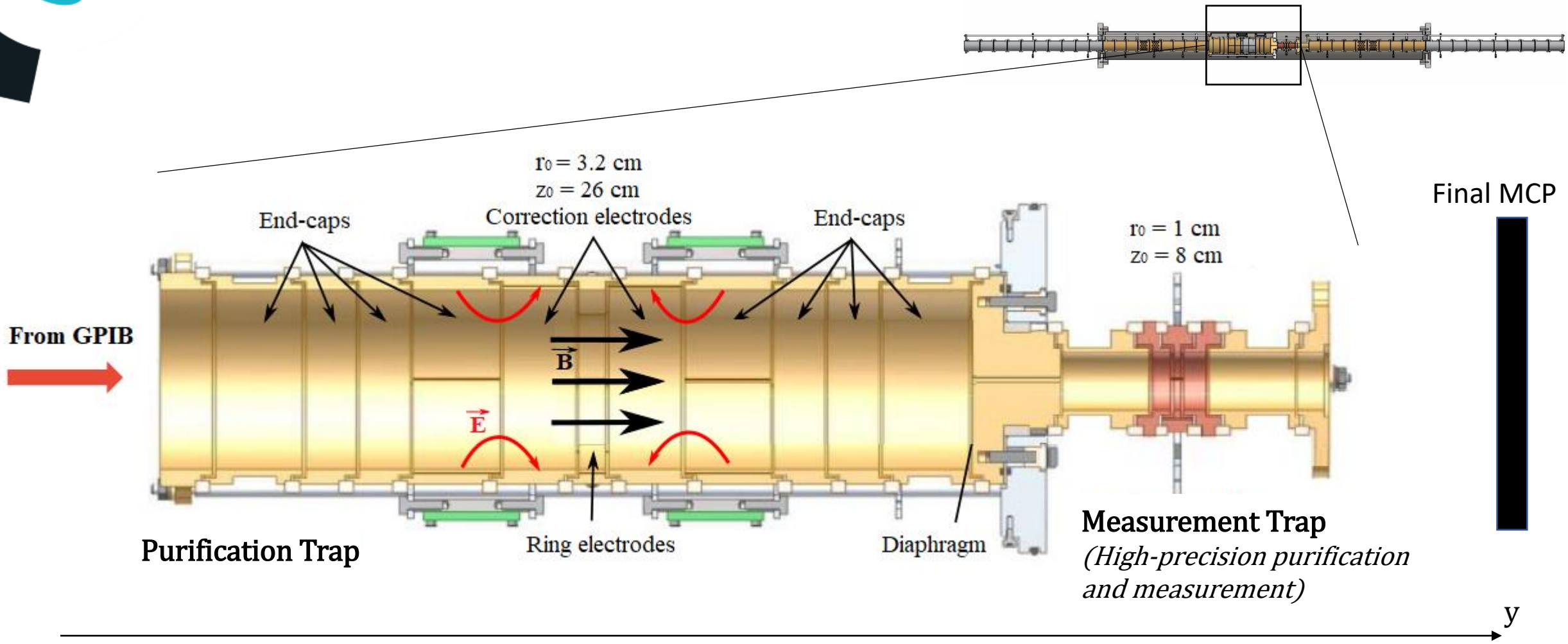

3 eigen motions

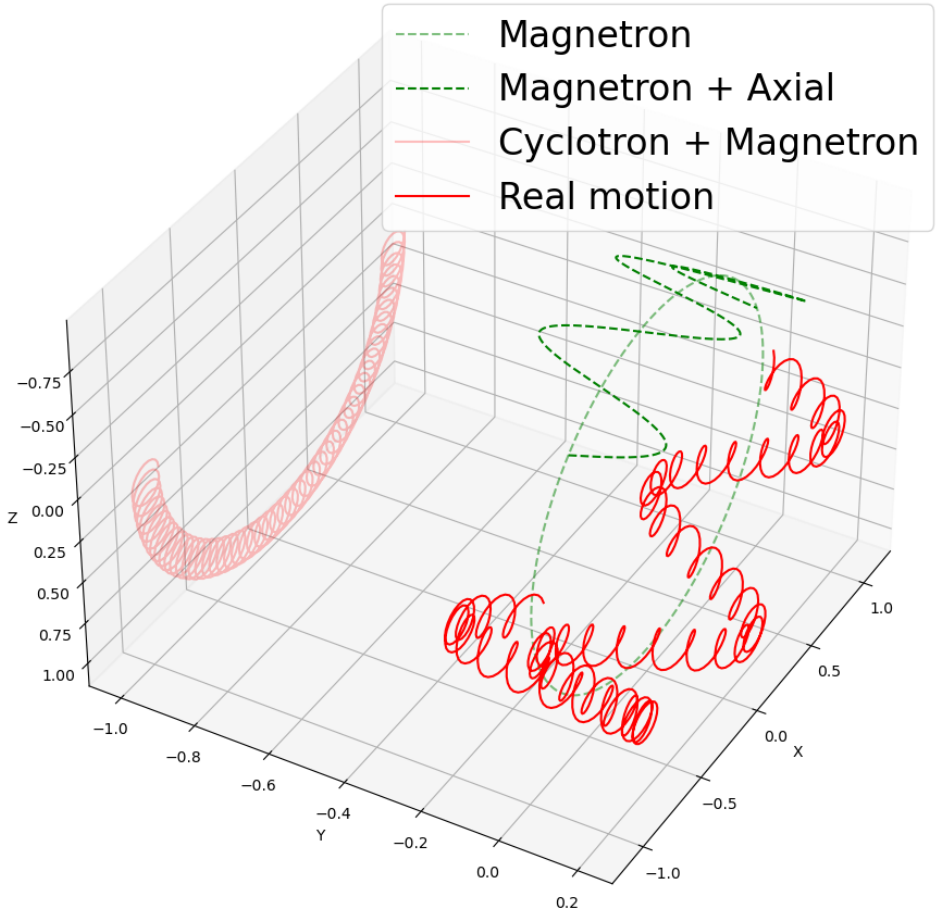

- Axial motion ν_z (Fast and **damped** by the gas)
- Magnetron motion ν_- (Slow)
- Reduce cyclotron motion ν_+ (Fast and **damped** by the gas)

Cyclotron frequency $\boldsymbol{\nu_c = \frac{qB}{2\pi m}}$

- $\nu_c = \nu_+ + \nu_-$
- $\nu_c \approx \nu_+ (1MHz) \gg \nu_z (100kHz) \gg \nu_-(1kHz)$

Reacting to:

- RF excitations:
  - Dipolar (Increase or decrease the amplitude)
  - Quadrupolar (Convert one into another)
- Gas pressure

Buffer Gas Cooling Technique

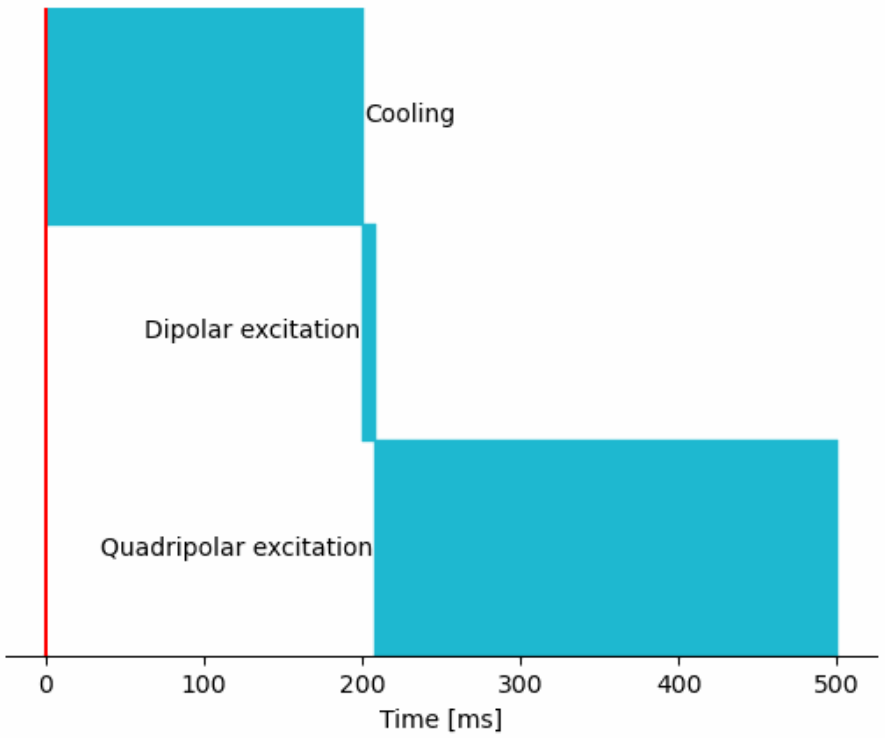

Buffer Gas Cooling Technique

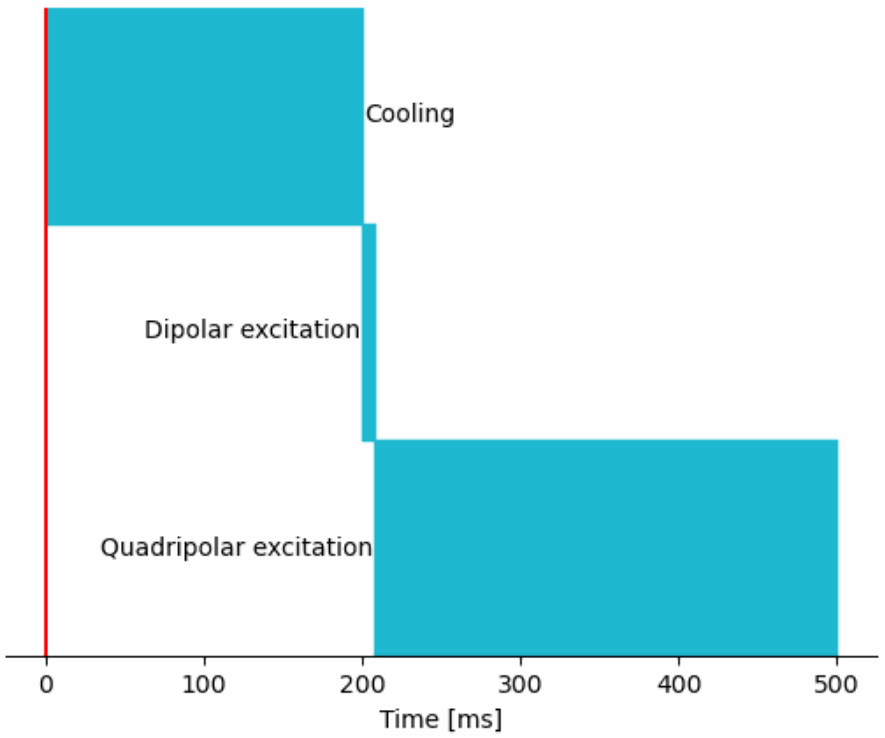

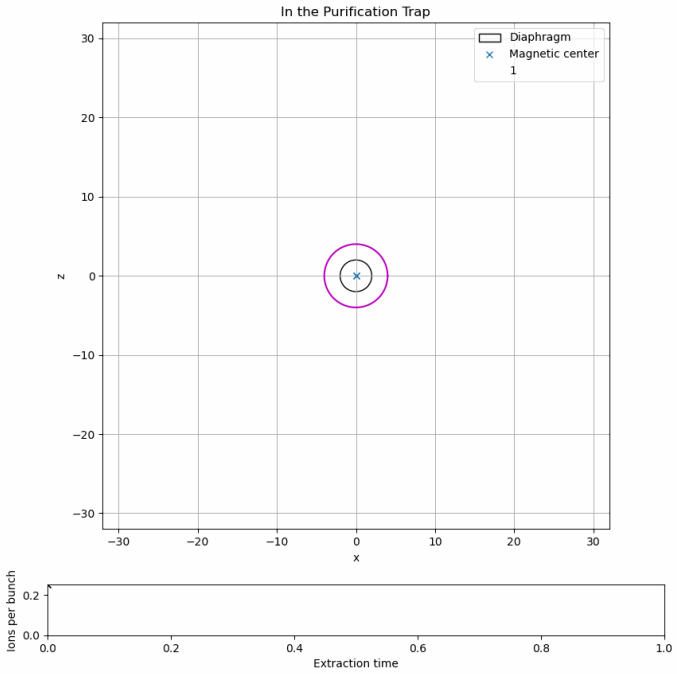

Magnetron decentering

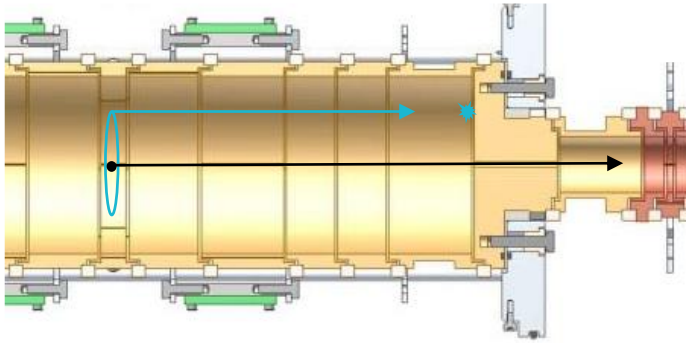

Legend :

- Trap center → x
- Diaphragm
- Ion Bunch

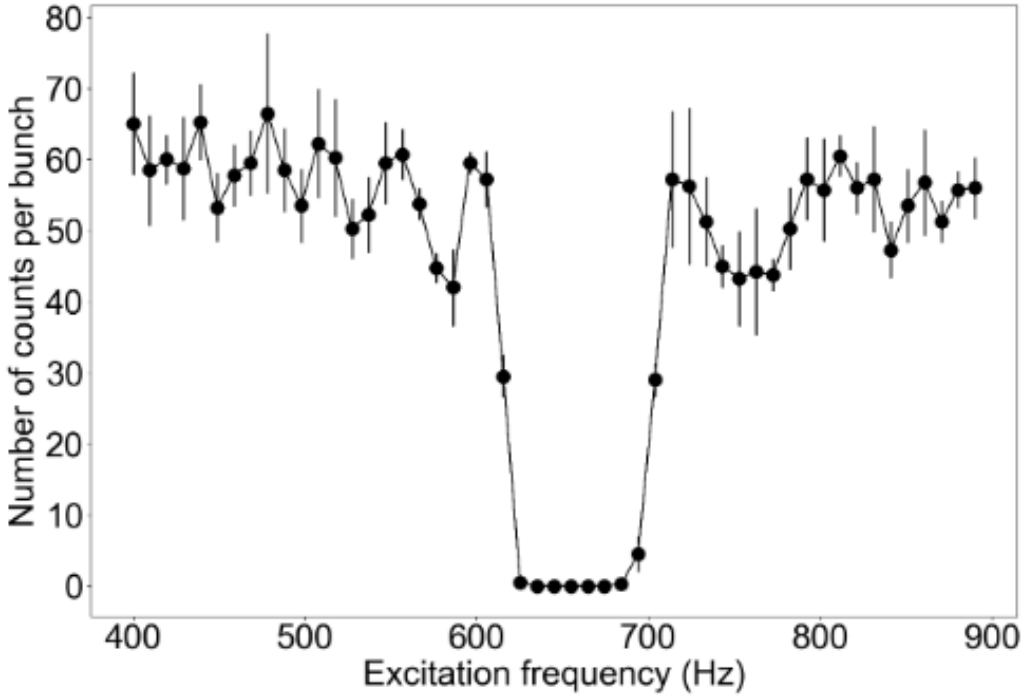

Dipolar excitation frequency's scan (increase the magnetron motion's amplitude)

P. Ascher, et al., Nuclear Inst. and Methods in Physics Research, A 1019 (2021) 165857

Magnetron decentering

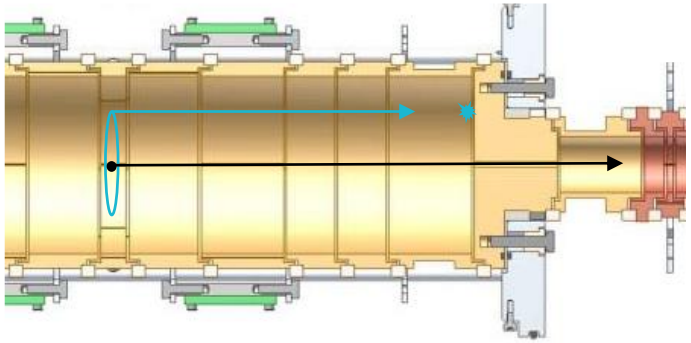

Centered

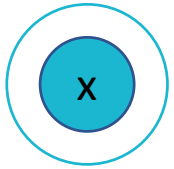

Centered

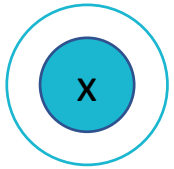

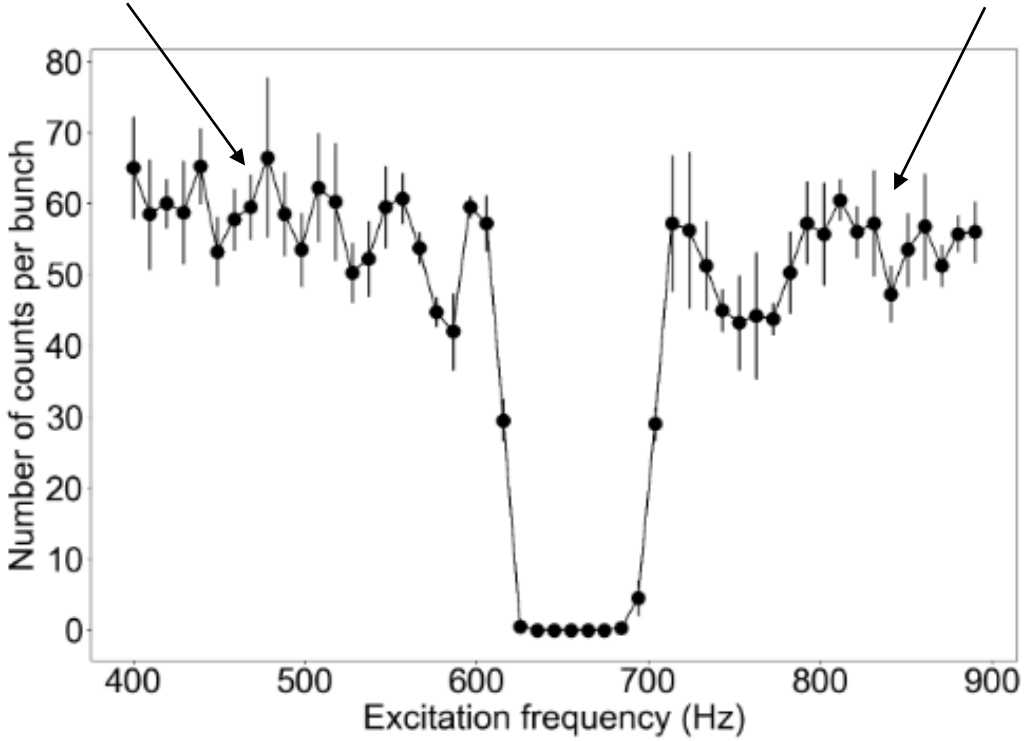

Legend :

- Trap center → x
- Diaphragm
- Ion Bunch

Dipolar excitation frequency's scan (increase the magnetron motion's amplitude)

P. Ascher, et al., Nuclear Inst. and Methods in Physics Research, A 1019 (2021) 165857

Magnetron decentering

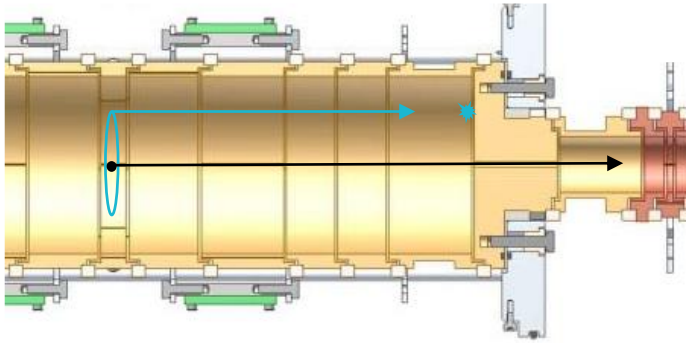

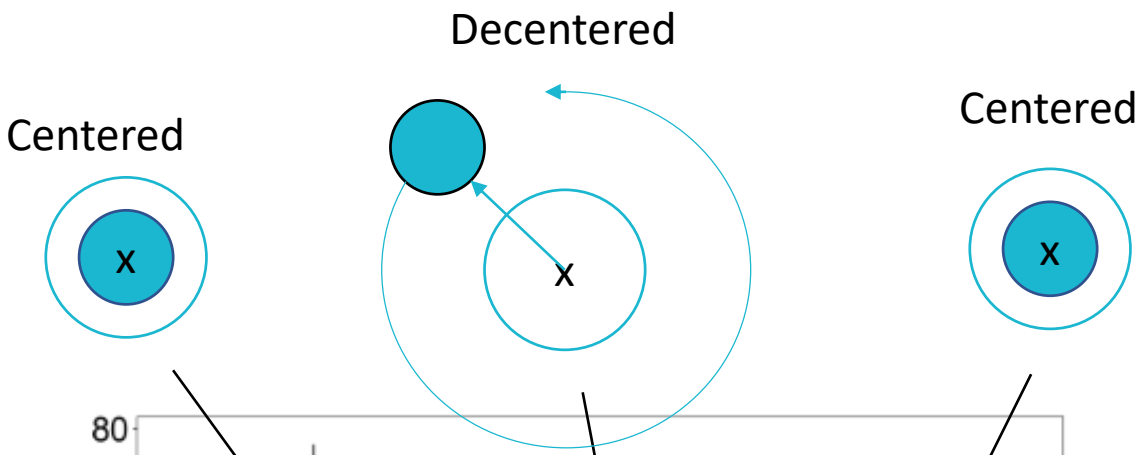

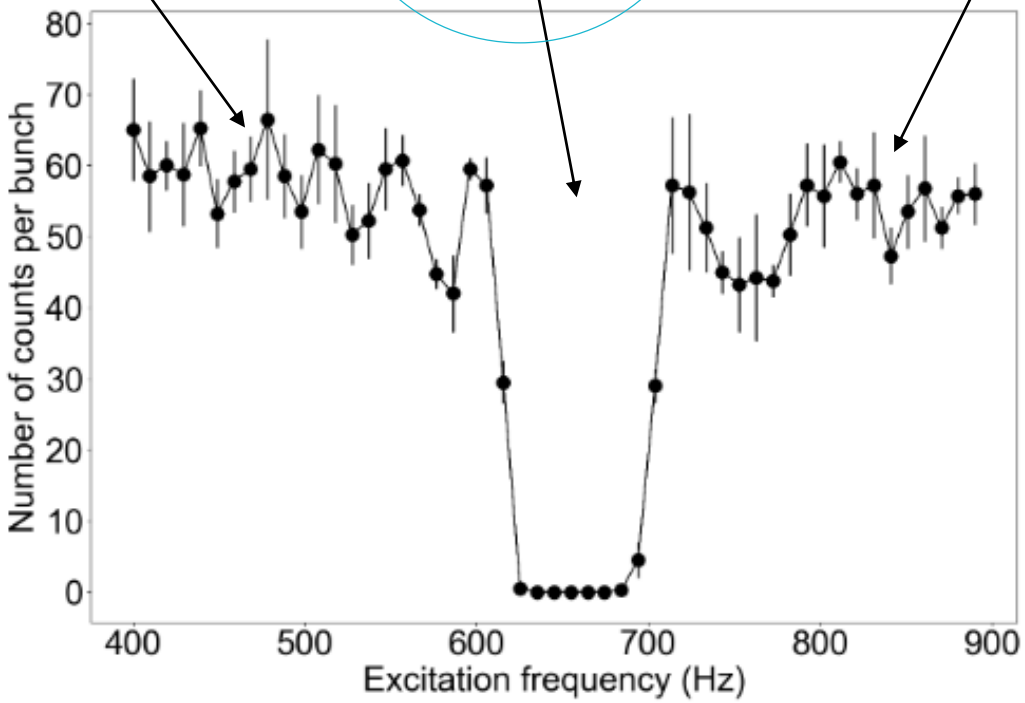

Legend :

- Trap center
- Diaphragm
- Ion Bunch

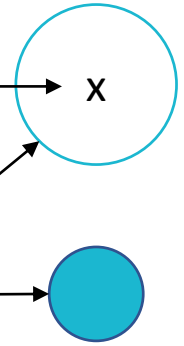

Dipolar excitation frequency's scan (increase the magnetron motion's amplitude)

P. Ascher, et al., Nuclear Inst. and Methods in Physics Research, A 1019 (2021) 165857

Buffer gas cooling technique

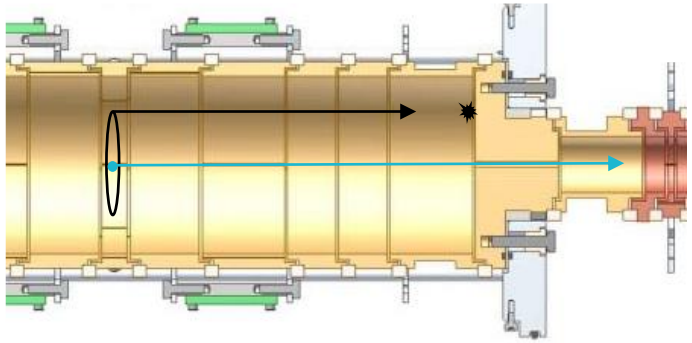

Quadrupolar excitation frequency's scan

(magnetron motion's conversion into cyclotron motion)

P. Ascher, et al., Nuclear Inst. and Methods in Physics Research, A 1019 (2021) 165857

Decentered

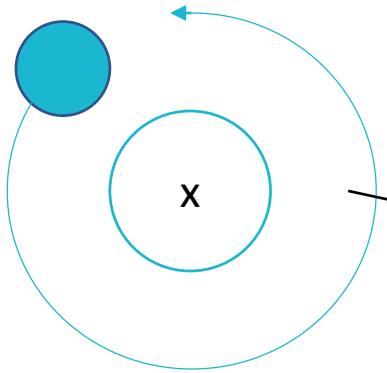

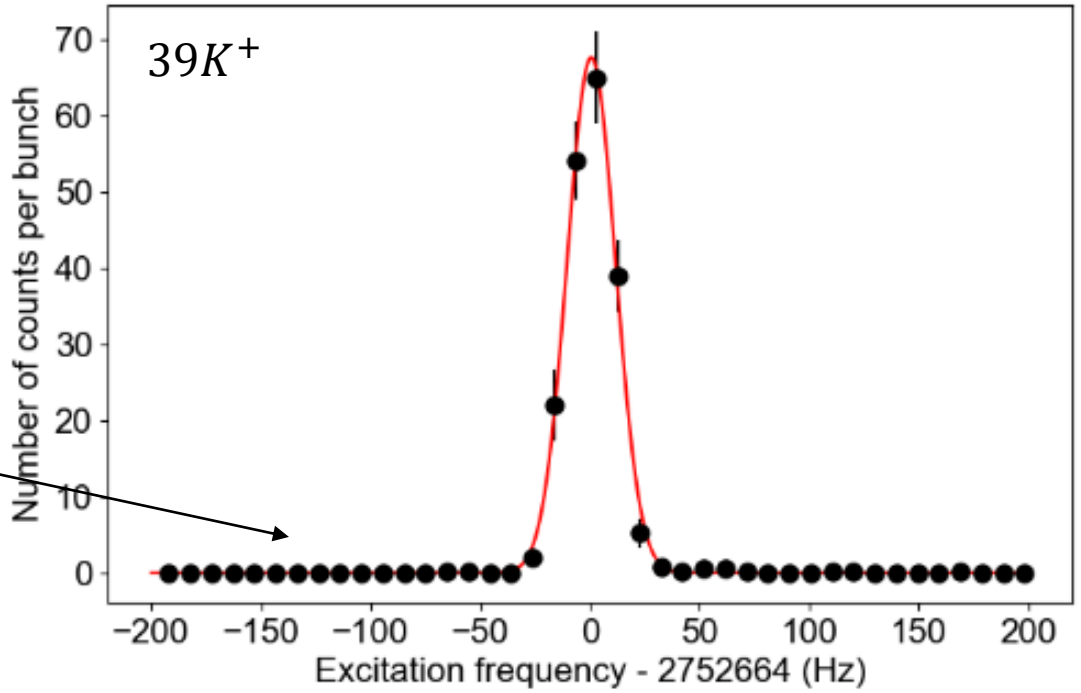

Buffer gas cooling technique

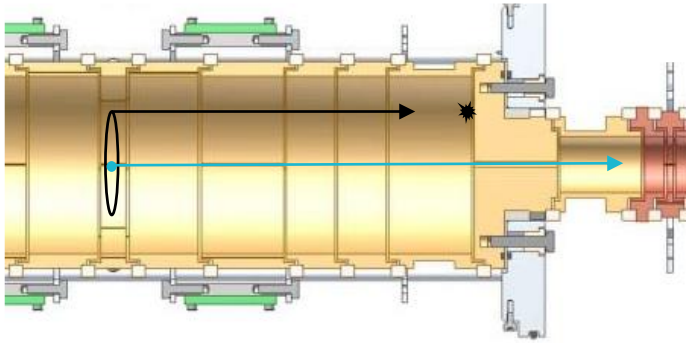

$$\nu_c = \frac{qB}{2\pi m}$$

Decentered

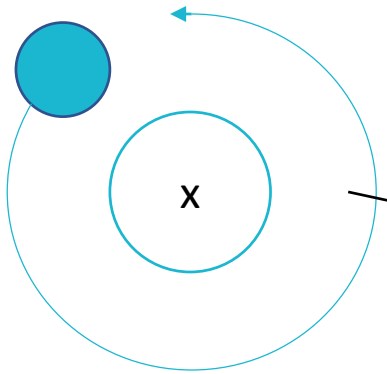

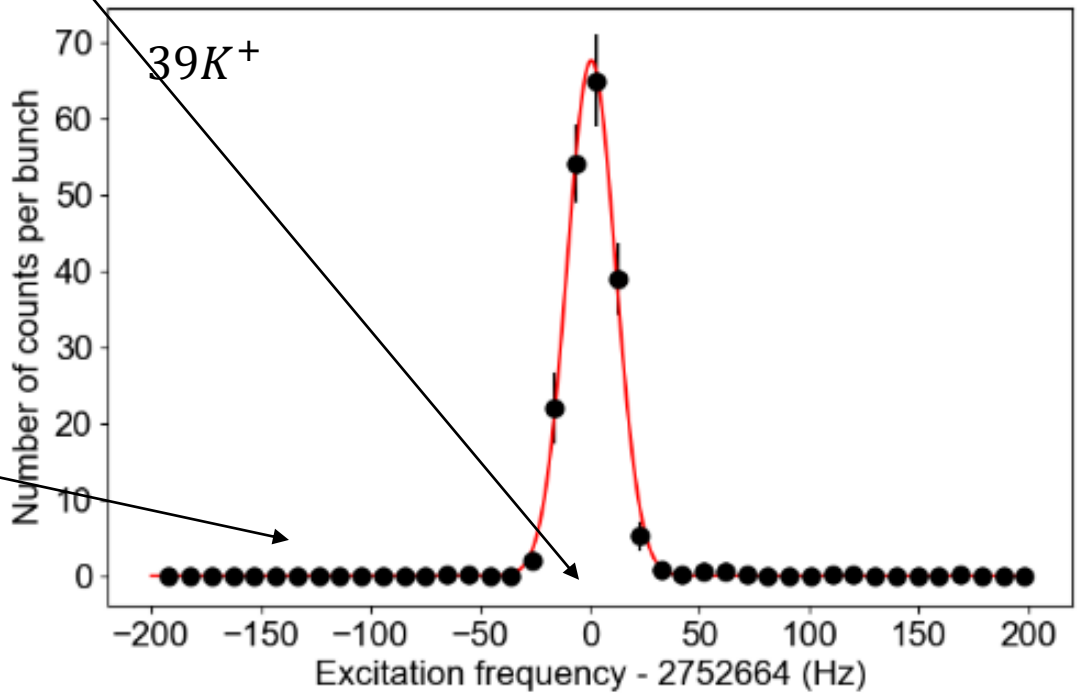

Quadrupolar excitation frequency's scan

(magnetron motion's conversion into cyclotron motion)

P. Ascher, et al., Nuclear Inst. and Methods in Physics Research, A 1019 (2021) 165857

Buffer gas cooling technique

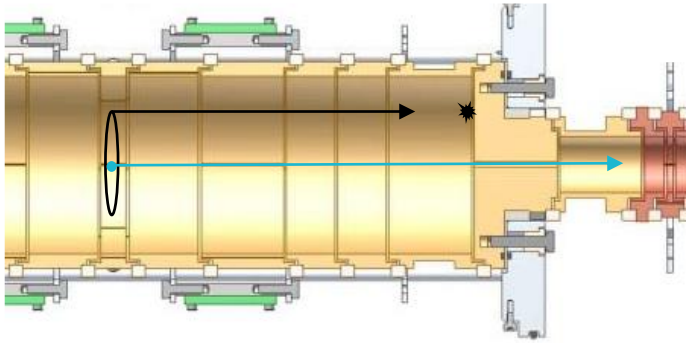

$$\nu_c = \frac{qB}{2\pi m}$$

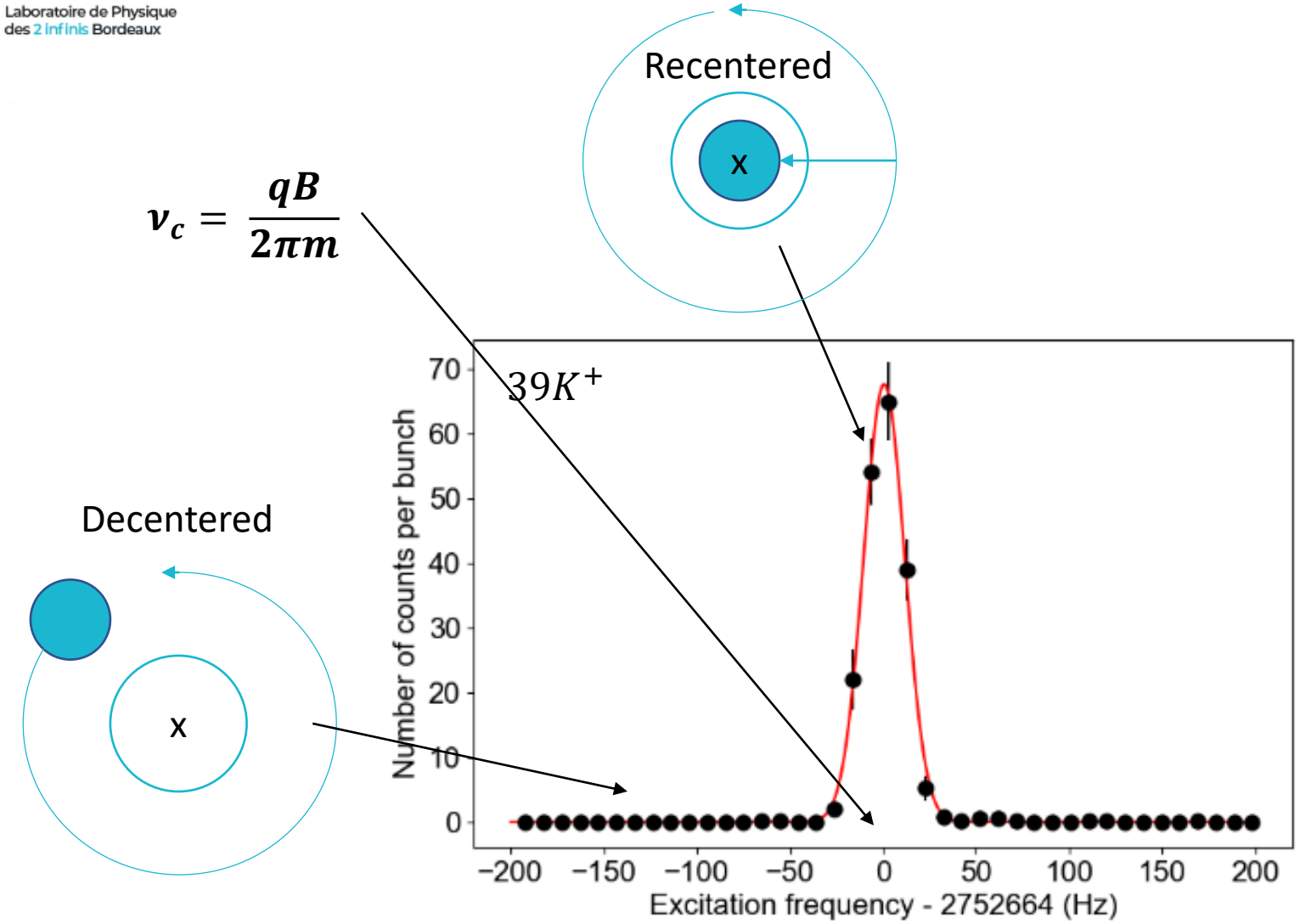

Quadrupolar excitation frequency's scan

(magnetron motion's conversion into cyclotron motion)

P. Ascher, et al., Nuclear Inst. and Methods in Physics Research, A 1019 (2021) 165857

Buffer gas cooling technique

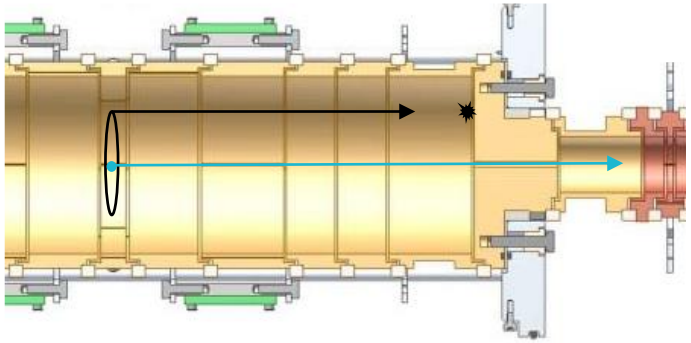

$$\nu_c = \frac{qB}{2\pi m}$$

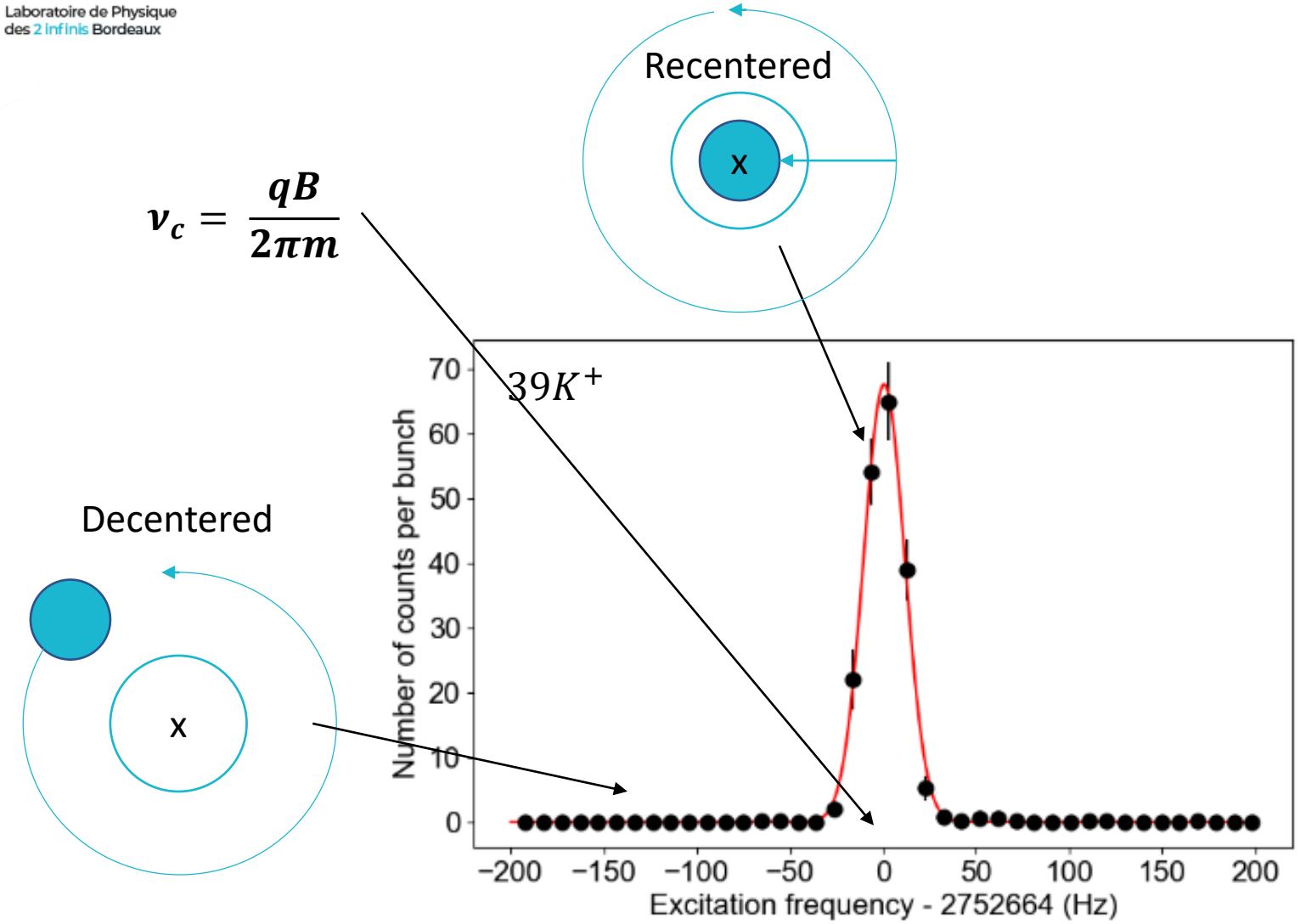

Quadrupolar excitation frequency's scan

(magnetron motion's conversion into cyclotron motion)

P. Ascher, et al., Nuclear Inst. and Methods in Physics Research, A 1019 (2021) 165857

Resolution : $\frac{\nu_c}{\Delta\nu_c} \propto \frac{m}{\Delta m} \approx 10^5$

Time of Flight Ion Cyclotron Reasonance

- give radial energy to the ions
- Then convert it to axial energy
- Therefore ToF is shorter at the resonance

M. Koenig, et al., Quadrupole excitation of stored ion motion at the true cyclotron frequency, Int. J. Mass Spectrom. 31 (1995) 95, https://doi.org/10.1016/0168-1176(95)04146-C

Ideal ToF ICR

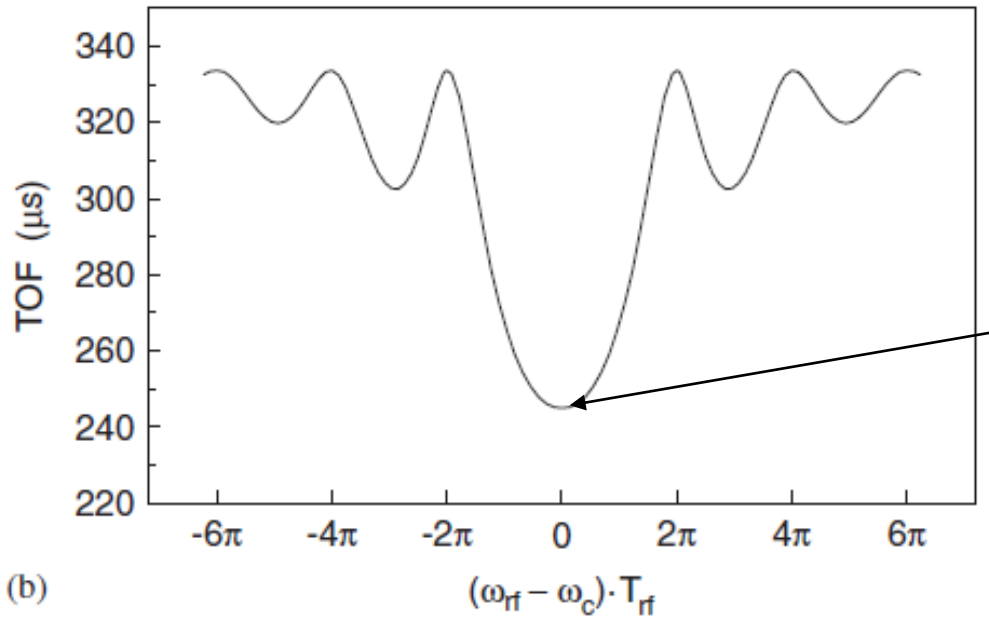

$$\nu_c = \frac{qB}{2\pi m}$$

First ToF-ICR on PIPERADE

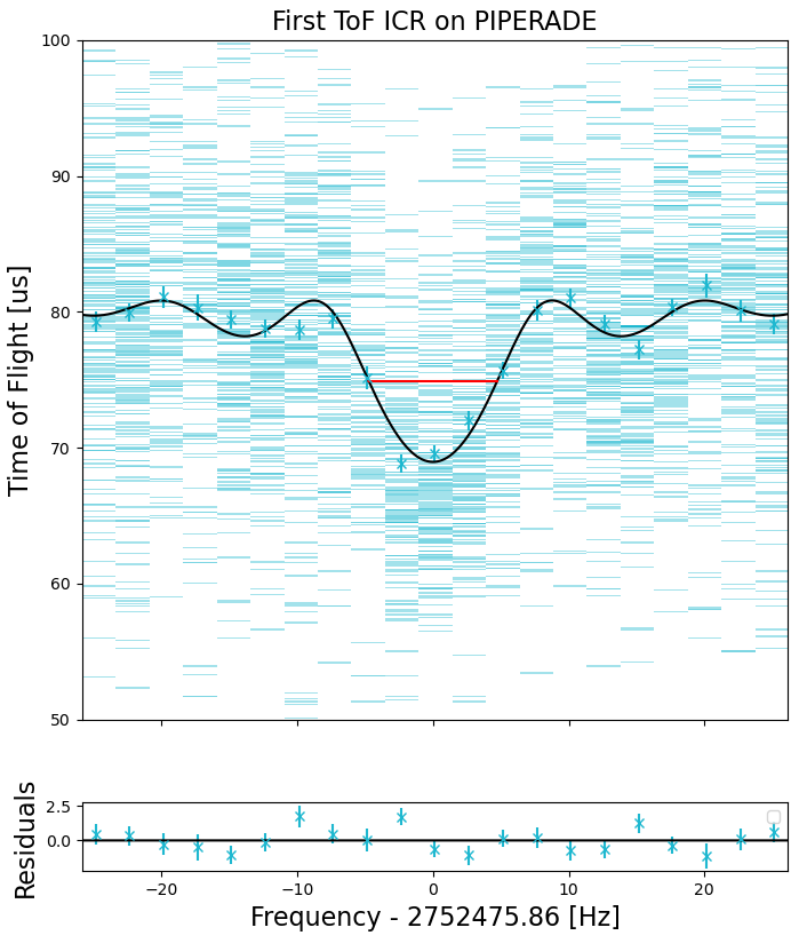

$$Excitation\ Time\ of\ 100\ ms$$

$$FWHM_{exp} \approx 9\ Hz$$

$$FWHM_{Th} \approx 10\ Hz$$

$$\nu_c = 2752475{,}86\ \pm 0{,}25\ Hz$$

Phase-Imaging Ion-Cyclotron-Resonance technique

- Phase-Imaging Ion-Cyclotron-Resonance technique (PI-ICR) to be installed when the position sensitive MCP detector arrives
- PI-ICR powerful tool for high precision mass measurements and for phase dependant cleaning of ion beams
  - 40 times higher resolving power
  - 5 times increase in precision **compared to TOF-ICR**
  - Drawback: setting up time is long for each case, high sensitivity to fluctuations of trap-voltages

$$\nu = \frac{\phi_c + 2\pi n}{2\pi t}$$

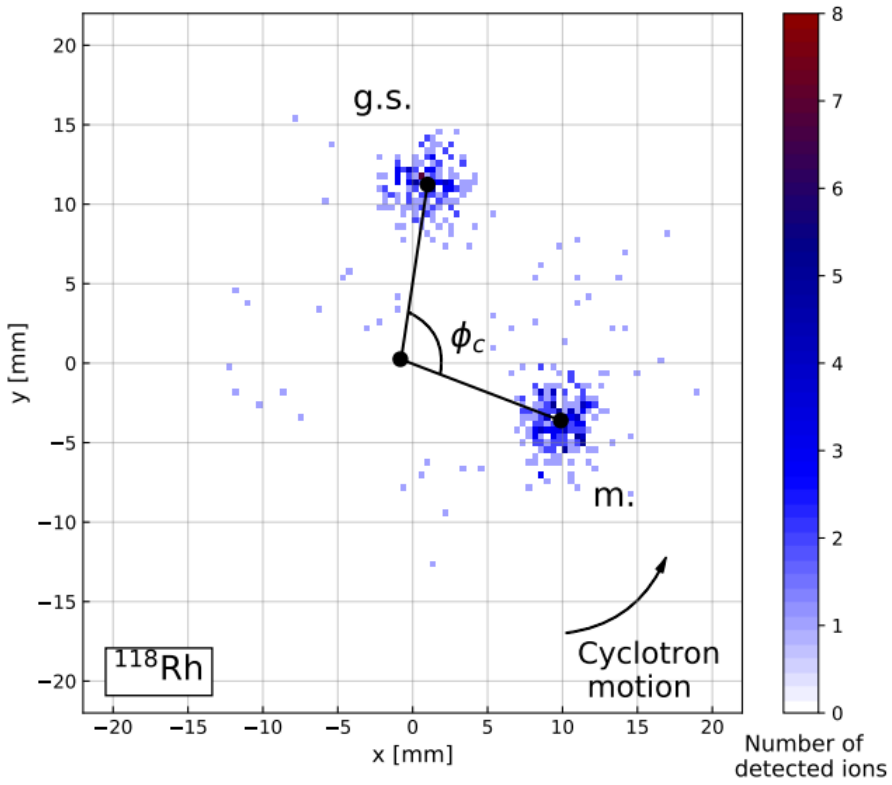

An example of the PI-ICR of ^{118}Rh from JYFLTRAP (by M.Hukkanen et al.,)

I284: Mass measurements in the vicinity of 78Ni for nuclear astrophysics and nuclear structure studies

Targeted nuclei:

- ^{68,69}Fe
- $^{68\text{-}71}$Co
- ^{76,77}Ni
- ^{81}Zn
- ^{84}Ga
- ^{79,86}Ge

In the vicinity of $Z = 28$ and $N = 50$ closed shells for

1. Study of abundances origin
2. Nuclear structure studies

Utilization of two experimental techniques

- The double Penning traps with the **PI-ICR** technique for high precision measurements
- The new **MR-TOF MS** for beam purification and fast mass measurements

1

- Understanding the residual solar abundances associated to the *r*-process
- Better constrain theoretical models with precise mass measurements

2

- Is the $Z = 28$ shell gap modified for neutron rich nuclei?
- Contradictory experimental observations → possible shape coexistence
- Nuclear mass can provide an experimental estimation of the gaps

[1] *L. Canete et al., Phys. Rev. C 101, 041304 (2020).*

Conclusion

- The new source has arrived and is being characterised on the test bench
- Buffer Gas Cooling Technique has been performed
- ToF-ICR has also been performed
- The new delay-line has been ordered
- The proposal for the experiment In Finland has been accepected
- The experiment in Finland will be planed

Thank you!

The PIPERADE team:

P. Alfaurt, P. Ascher, D. Atanasov, L. Daudin, M. Flayol, M. Gerbaux, S. Grévy, M. Hukkanen, A. Husson, B. Lachacinski and A. de Roubin