Some aspects of simulation of complex many-body systems on quantum computers

IJCLab

Ph.D. Supervisor: Denis Lacroix

Edgar Andres Ruiz Guzman

22 November 2022

Outline

1. Introduction

2. Mapping a physical problem into a quantum computer

3. Quantum Ansätzes: Symmetry breaking and restoration

4. Ground and excited energies of many-body Hamiltonians
   1. Quantum Phase Estimation (QPE)
   2. Generating function technique
   3. Quantum Krylov

5. Alternative methods for symmetry restoration

6. Conclusion

1. Introduction

Problematics for many-body systems

- Create ansätzes that can reproduce the eigenstates of a Hamiltonian.

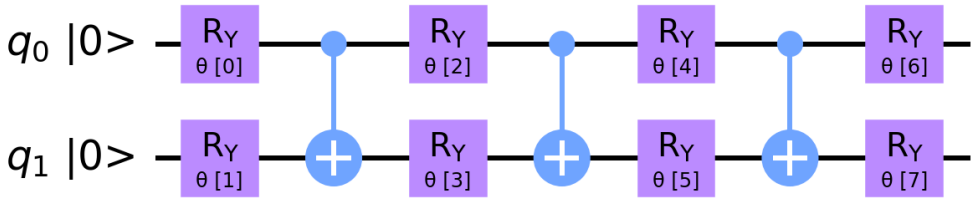

Ansatz: Circuit that creates a variational quantum state $|\Psi(\{\theta\})\rangle$ in a quantum register.

- Find the spectrum of many-body Hamiltonians.

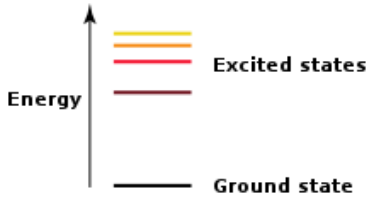

- Obtain the quantum state evolution.

$$e^{-itH}|\psi_0\rangle \rightarrow$$

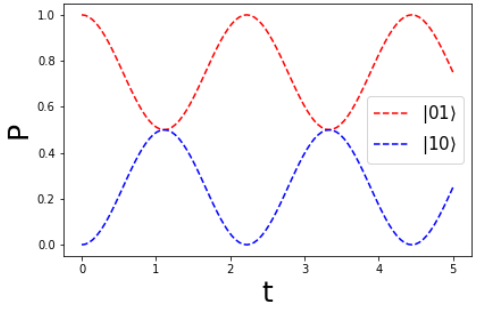

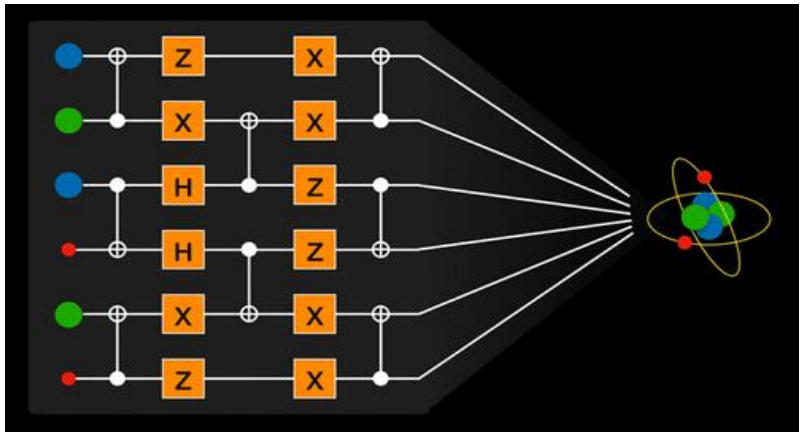

https://pubs.acs.org/doi/10.1021/acs.chemrev.8b00803

2. Mapping a physical problem into a quantum computer

Many-body Hamiltonians

Nuclear Superfluidity. Pairing in Finite Systems, by D.M. Brink and R.A. Broglia, Contemporary Physics. (2010)

- Pairing model ($\hat{N}_p = \hat{a}_p^\dagger \hat{a}_p + \hat{a}_{\bar{p}}^\dagger \hat{a}_{\bar{p}}$, $\hat{P}_p^\dagger = \hat{a}_p^\dagger \hat{a}_{\bar{p}}^\dagger$):

$$\hat{H}_P = \sum_p \varepsilon_p \hat{N}_p - g \sum_{p,q} \hat{P}_p^\dagger \hat{P}_q$$

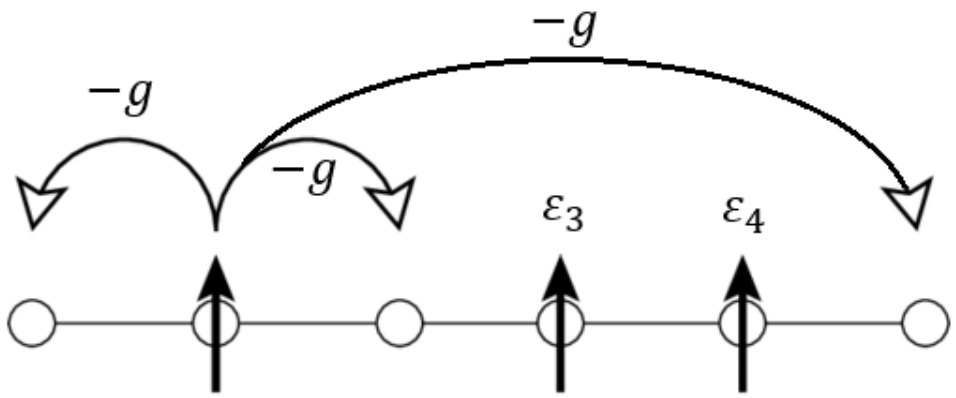

- Fermi-Hubbard model ($\hat{n}_{i,\sigma} = \hat{a}_{i,\sigma}^\dagger \hat{a}_{i,\sigma}, \sigma = \{\uparrow, \downarrow\}$):

A. Altland and B. Simons, Interaction effects in the tight-binding system. Condensed Matter Field Theory. Cambridge University Press. pp. 58 (2006).

$$\hat{H}_H = -J \sum_{i,\sigma} \left(\hat{a}_{i+1,\sigma}^\dagger \hat{a}_{i,\sigma} + \hat{a}_{i,\sigma}^\dagger \hat{a}_{i+1,\sigma} \right) + U \sum_i \hat{n}_{i,\uparrow} \hat{n}_{i,\downarrow}$$

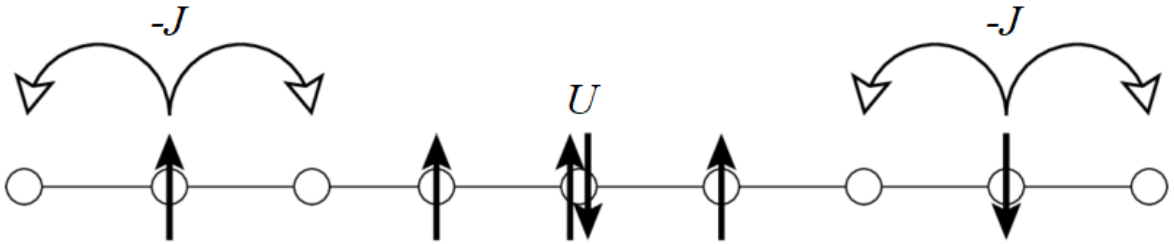

Jordan-Wigner transformation(JWT) and Trotter evolution

Guido Fano, S. M. Blinder, Mathematical Physics in Theoretical Chemistry, 377 (2019).

Ovrum E, Hjorth-Jensen M. arXiv:0705.1928v1 (2007)

A. Khamoshi, F. A. Evangelista, and G. E. Scuseria, Quantum Sci. Technol. 6, 014004 (2021).

- JWT Operators → Pauli matrices

$$a_p^\dagger = \bigotimes_{k=1}^{p-1} Z_k \otimes Q_p^\dagger \bigotimes_{k=p+1}^{N} I_k \qquad \hat{Q}_p^\dagger = \frac{1}{2}(X_p - iY_p) = \begin{pmatrix} 0 & 0 \\ 1 & 0 \end{pmatrix}_p$$

Seniority zero scheme → No broken pairs: $\hat{P}_p^\dagger = \hat{a}_p^\dagger \hat{a}_{\bar{p}}^\dagger = \hat{Q}_p^\dagger$. $1\ pair \leftrightarrow 1\ qubit$.

- Trotter-Suzuki decomposition. E.g. Pairing Hamiltonian $\hat{H}_P = \underbrace{\sum_p \varepsilon_p \hat{N}_p}_{\hat{H}_\varepsilon} \underbrace{-g \sum_{p,q} \hat{P}_p^\dagger \hat{P}_q}_{\hat{H}_g} =$

  $\hat{H}_\varepsilon + \hat{H}_g$. As $[\hat{H}_\varepsilon, \hat{H}_g] \neq 0$:

H. F. Trotter, Proc. Am. Math. Soc. 10, 545 (1959)

$$e^{-it\hat{H}_P} \approx \left(e^{-i\hat{H}_g \frac{t}{n}} e^{-i\hat{H}_\varepsilon \frac{t}{n}}\right)^n$$

Pairing problem

- Single-particle operator:

$$\hat{U}_\varepsilon(t) = e^{-i\hat{H}_\varepsilon t} = \bigotimes_{p=1}^{N} R(\phi_p)$$

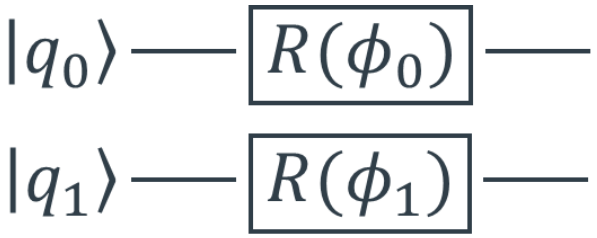

with $\phi = -2\varepsilon_p t$ and $R(\phi) = \begin{pmatrix} 1 & 0 \\ 0 & e^{i\phi} \end{pmatrix}$.

- Two-particle operator:

$$\hat{U}_g(t) = e^{-i\hat{H}_g t} = \prod_{p>q}^{N} M_{pq}$$

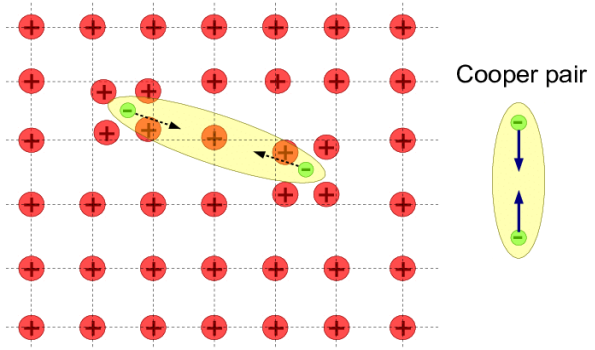

Chernodub, Maxim. Can nothing be a superconductor and a superfluid?. Proceedings of Science. (2011).

$$M_{pq} = \begin{pmatrix} 1 & 0 & 0 & 0 \\ 0 & \cos(\lambda) & i\sin(\lambda) & 0 \\ 0 & i\sin(\lambda) & \cos(\lambda) & 0 \\ 0 & 0 & 0 & 1 \end{pmatrix}_{pq} \rightarrow$$

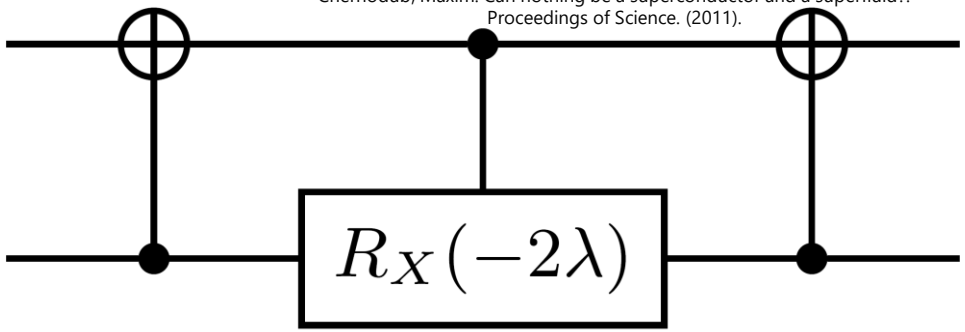

with $\lambda = tg$.

E. A. Ruiz Guzman and D. Lacroix, arXiv:2104.08181. (2021)

Hubbard Hamiltonian

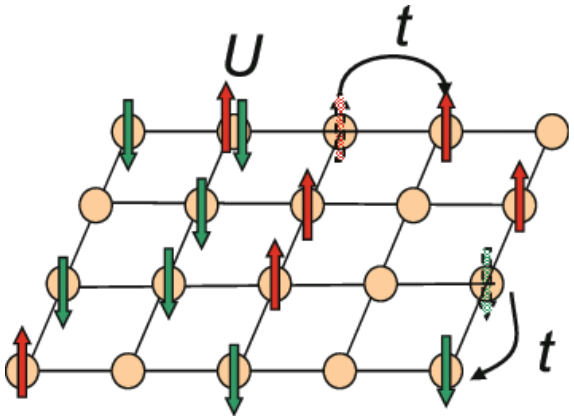

Yamada et al. High Performance LOBPCG Method for Solving MultipHigh-Performance Hubbard Model: Efficiency of Communication Avoiding Neumann Expansion Preconditioner. 10.1007/978-3-319-69953-0_14. (2018).

- Single-particle operator:

$$\hat{U}_U(t) = e^{-i\hat{H}_U t/\hbar} = \prod_\alpha CR(\phi)$$

with $\phi = -tU/\hbar$.

$CR(\phi) \rightarrow$

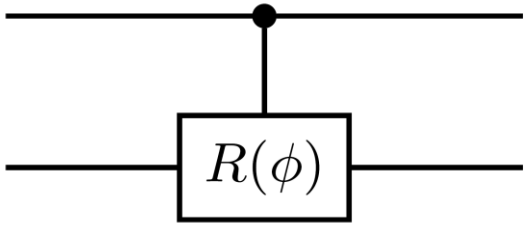

- Two-particle operator:

$$\hat{U}_J(t) = e^{-i\hat{H}_J t/\hbar} = \prod_\alpha M_{\alpha,\alpha+1}$$

$$M_{\alpha,\alpha+1} = \begin{pmatrix} 1 & 0 & 0 & 0 \\ 0 & \cos(\lambda) & i\sin(\lambda) & 0 \\ 0 & i\sin(\lambda) & \cos(\lambda) & 0 \\ 0 & 0 & 0 & 1 \end{pmatrix}_{\alpha,\alpha+1} \rightarrow$$

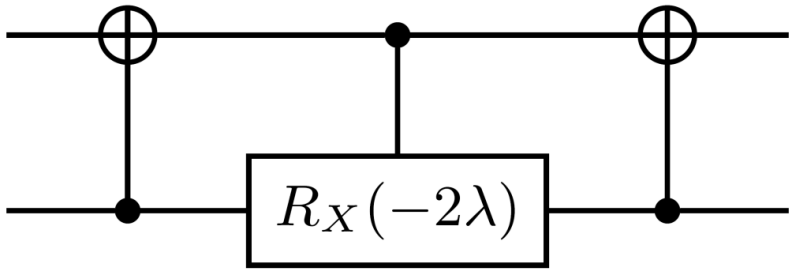

with $\lambda = Jt/\hbar$.

E. A. Ruiz Guzman and D. Lacroix, arXiv:2104.08181. (2021)

3. Quantum Ansätzes: Symmetry breaking and restoration

Variational Quantum Eigensolver (VQE)

- Hamiltonian decomposition → $\hat{H} = \beta_1 \hat{V}_1 + \beta_2 \hat{V}_2 + \cdots.$

- VQE:

Tilly et al. The Variational Quantum Eigensolver: A review of methods and best practices. arXiv:2111.05176v1 (2021).

https://fr.m.wikipedia.org/wiki/Fichier:Circle-icons-computer.svg

$\{\theta\}$

$\{\Delta\theta\}$

$\langle H \rangle = \beta_1 \langle \hat{V}_1 \rangle + \beta_2 \langle \hat{V}_2 \rangle + \cdots$

$|\Psi(\{\theta\})\rangle$

$\langle \Psi | \hat{V}_1 | \Psi \rangle$

$\langle \Psi | \hat{V}_2 | \Psi \rangle$

$\ldots$

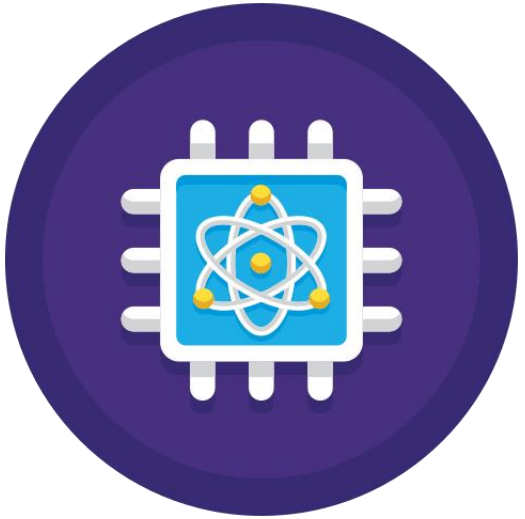

https://cdn-icons-png.flaticon.com/512/1998/1998708.png

Bardeen–Cooper–Schrieffer(BCS) ansatz

- BCS theory →first microscopic theory of superconductivity.

$$|\Phi_{BCS}\rangle = \prod_p (u_p + v_p \hat{P}_p^\dagger)|0\rangle_p$$

With $\hat{P}_p^\dagger = \hat{a}_p^\dagger \hat{a}_{\bar{p}}^\dagger$. 1 pair ↔ 1 qubit.

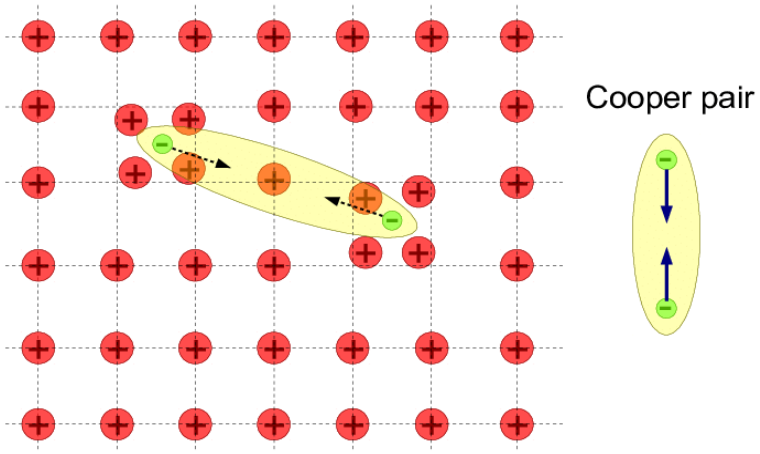

Chernodub, Maxim. Can nothing be a superconductor and a superfluid?. Proceedings of Science. (2011).

- Equation:

$$\left|\Phi_{BCS}(\{\theta_p\})\right\rangle = \bigotimes_{p=0}^{N-1} \left[\sin(\theta_p)|0\rangle_p + \cos(\theta_p)|1\rangle_p\right] = \prod_{p=0}^{N-1} R_Y(\pi - 2\theta_p)|0\rangle_p$$

Symmetry breaking:

Superposition of states with different number of pairs.

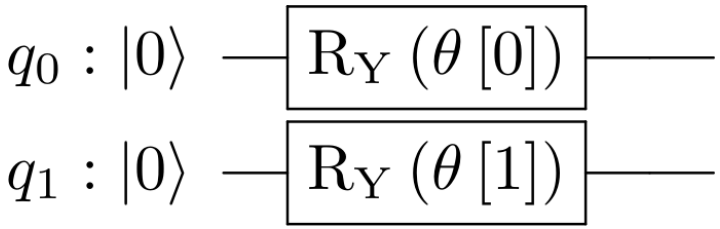

université PARIS-SACLAY

Quantum BCS minimization

Classical: David Brink. Nuclear Superuidity: Pairing in Finite Systems. Observatory, 126, 2006.

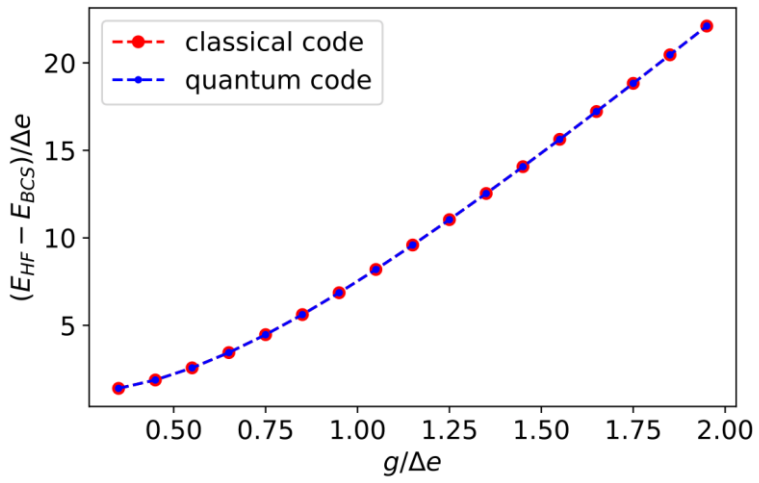

1. Define:
   - $\varepsilon_p = p\Delta e, g \rightarrow$ Pairing Hamiltonian.
   - Number of pairs n_p.
   - Tolerance ϵ_{tol} for $\left|\langle\Phi_{BCS}\{\theta_p\}|\widehat{N}|\Phi_{BCS}\{\theta_p\}\rangle - n_p\right|$.

   Guess:
   - $\{\theta_p\}$ and the Fermi energy λ.

2. While $\left|\langle\widehat{N}\rangle - n_p\right| \geq \epsilon_{tol}$:
   1. Minimize $\mathcal{C}(\{\theta_p\}) = \langle\Phi_{BCS}\{\theta_p\}|\widehat{H}_P|\Phi_{BCS}\{\theta_p\}\rangle - \langle\Phi_{BCS}\{\theta_p\}|\lambda(\widehat{N} - n_p)|\Phi_{BCS}\{\theta_p\}\rangle$:
      1. $\boxed{\langle\Phi_{BCS}\{\theta_p\}|\widehat{H}_P|\Phi_{BCS}\{\theta_p\}\rangle \rightarrow \text{Quantum Computer.}}$
      2. $\langle\Phi_{BCS}\{\theta_p\}|\widehat{N}|\Phi_{BCS}\{\theta_p\}\rangle \rightarrow$ Classical computer:

$$\langle\Phi_{BCS}\{\theta_p\}|\widehat{N}|\Phi_{BCS}\{\theta_p\}\rangle = \sum_p \cos^2(\theta_p)$$

      $\Rightarrow \{\theta'_p\}$.
   2. $\lambda' = \lambda + \Delta e\left(n_p - \langle\Phi_{BCS}\{\theta'_p\}|\widehat{N}|\Phi_{BCS}\{\theta'_p\}\rangle\right)$.
   3. $\lambda' \rightarrow \lambda$ and $\{\theta'_p\} \rightarrow \{\theta_p\}$.

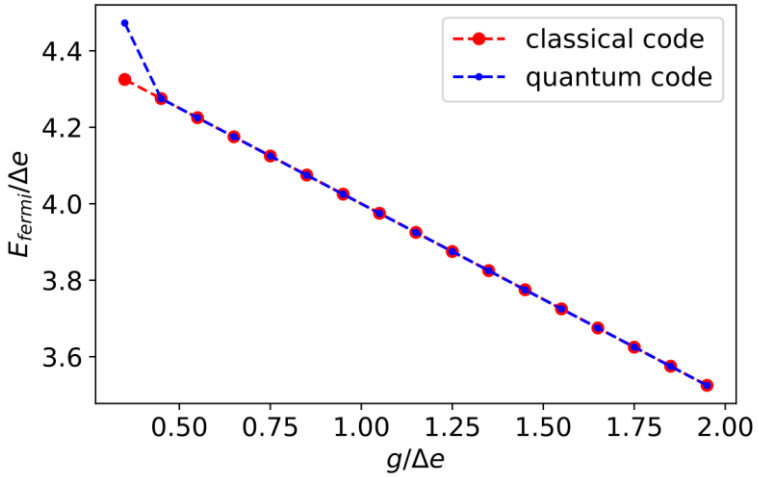

Symmetry restoration on a given number of particles with QPE

- Quantum Phase Estimation (QPE) → eigenvalues $\{\theta_k\}$ and eigenstates $\{\phi_k\}$:

$$U|\phi_k\rangle = e^{2\pi i\theta_k}|\phi_k\rangle$$

$$U = e^{2\pi i\left(\frac{\hat{N}}{2^{n_a}}\right)}$$

$$n_a = \lfloor \log_2 n_q \rfloor$$

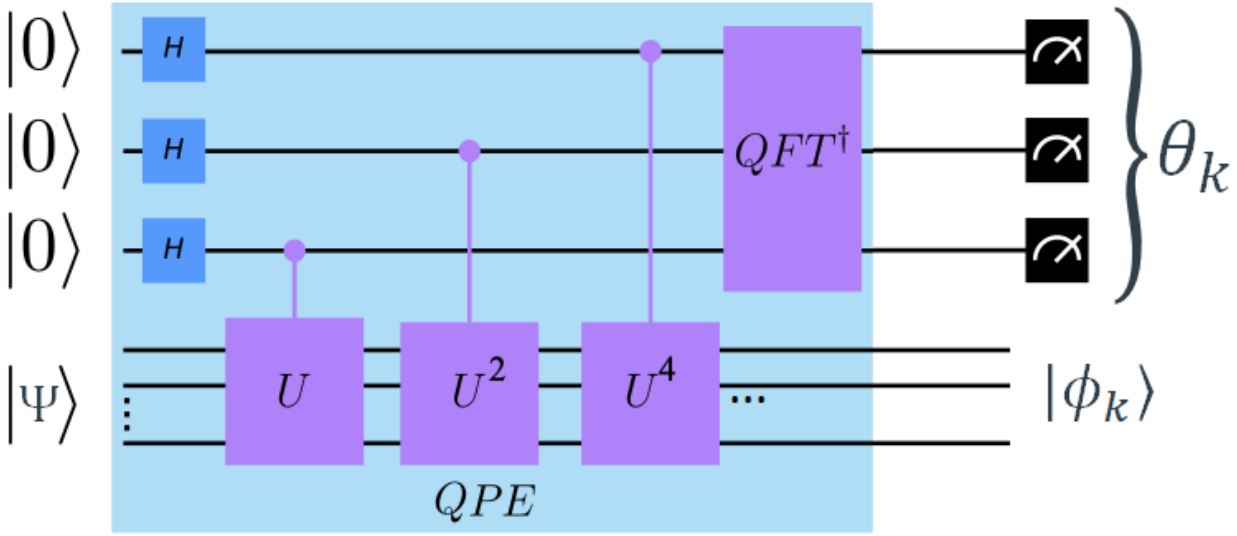

https://www.swissquantumhub.com/quantum-supremacy-quantum-hybrid-hhl-algorithm-for-solving-a-system-of-linear-equation/

Denis Lacroix, Phys. Rev. Lett. 125, 230502 (2020)

P. Siwach and D. Lacroix, Phys. Rev. A 104, 062435 (2021)

Quantum-Projection After Variation (Q-PAV) and Quantum-Variation After Projection (Q-VAP)

- Q-PAV:

$$|\Psi(n_1, n_2, \dots)\{\theta\}\rangle \xrightarrow{VQE} min(\langle\Psi|H|\Psi\rangle) \xrightarrow{\hat{\mathcal{P}}_{n_k}^{QPE}} n_k, |\Psi(n_k)\rangle$$

- Q-VAP:

$$|\Psi(n_1, n_2, \dots)\{\theta\}\rangle \xrightarrow{\hat{\mathcal{P}}_{n_k}^{QPE}} n_k, |\Psi(n_k)\rangle \xrightarrow{VQE} min(\langle\Psi(n_k)|H|\Psi(n_k)\rangle)$$

8 sites, 4 pairs.
$\Delta E/E(\%)$ → Percentage of error on the ground state energy.

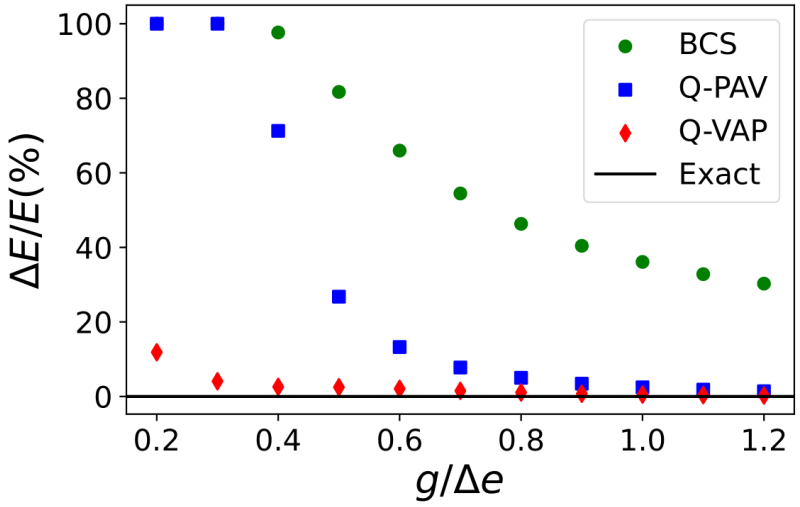

E. A. Ruiz Guzman and D. Lacroix, Phys. Rev. C **105**, 024324 (2022)

4. Ground and excited energies of many-body Hamiltonians

4.1 Quantum Phase Estimation (QPE)

4.2 Generating function technique

4.3 Quantum Krylov

Quantum Phase Estimation(QPE) for Energy Spectrum

Hamiltonian Phase Estimation

$$\left.\begin{aligned} H|\phi_k\rangle &= E_k|\phi_k\rangle \\ |\Psi\rangle &= \sum_k c_k\,|\phi_k\rangle \end{aligned}\right\} \rightarrow QPE(H,|\Psi\rangle) \rightarrow \{|c_k|^2, E_k\}$$

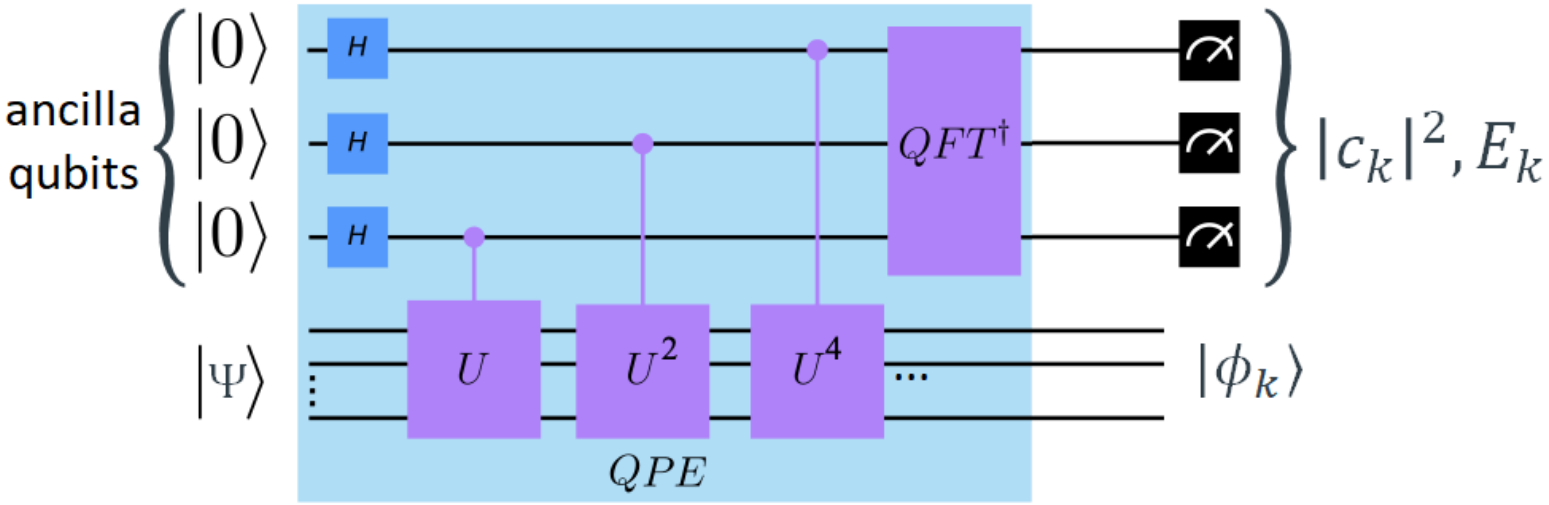

https://www.swissquantumhub.com/quantum-supremacy-quantum-hybrid-hhl-algorithm-for-solving-a-system-of-linear-equation/

$U^m = e^{-i\hat{H}\frac{t}{2^m}}$ with $m = 1, 2, \ldots, r$. $r \rightarrow$ Number of ancilla qubits.

Quantum Phase Estimation(QPE) for Energy Spectrum

Hamiltonian Phase Estimation

E. A. Ruiz Guzman and D. Lacroix,
Phys. Rev. C **105**, 024324 (2022)

- E.g. Pairing, 8 levels, 4 pairs:

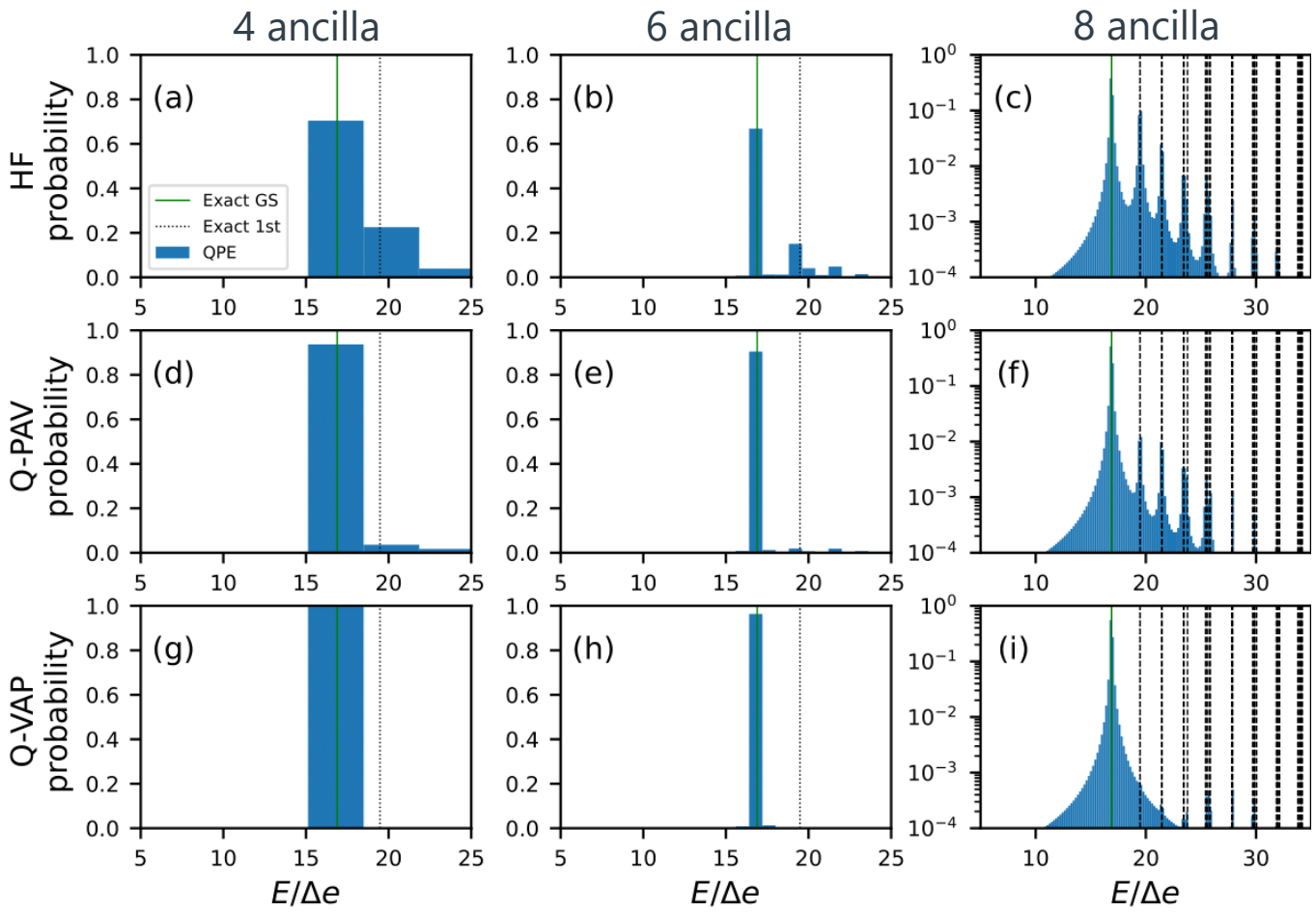

Generating function

- Generating function of a Hamiltonian $\hat{H}$ is:

$$F(t) = \langle\psi|e^{-i\hat{H}t}|\psi\rangle$$

- Moments of the Hamiltonian:

$$\langle H^k \rangle = \langle\psi|H^k|\psi\rangle$$

- Relation between them:

$$\langle H^k \rangle = (-i)^k \left.\frac{d^k F(t)}{dt^k}\right|_{t=0}$$

Plots generating function

E. A. Ruiz Guzman and D. Lacroix, arXiv:2104.08181. (2021)

- Pairing. 8 sites → 8 qubits. $|\psi_0\rangle = |00001111\rangle$. $g = 1$. $\varepsilon_{p=1,\ldots} = 2p$
- Hubbard. 4 sites → 8 qubits. $|\psi_0\rangle = \frac{1}{\sqrt{6}}(|00110011\rangle + \cdots)$. $U = J = 1$.

Pairing

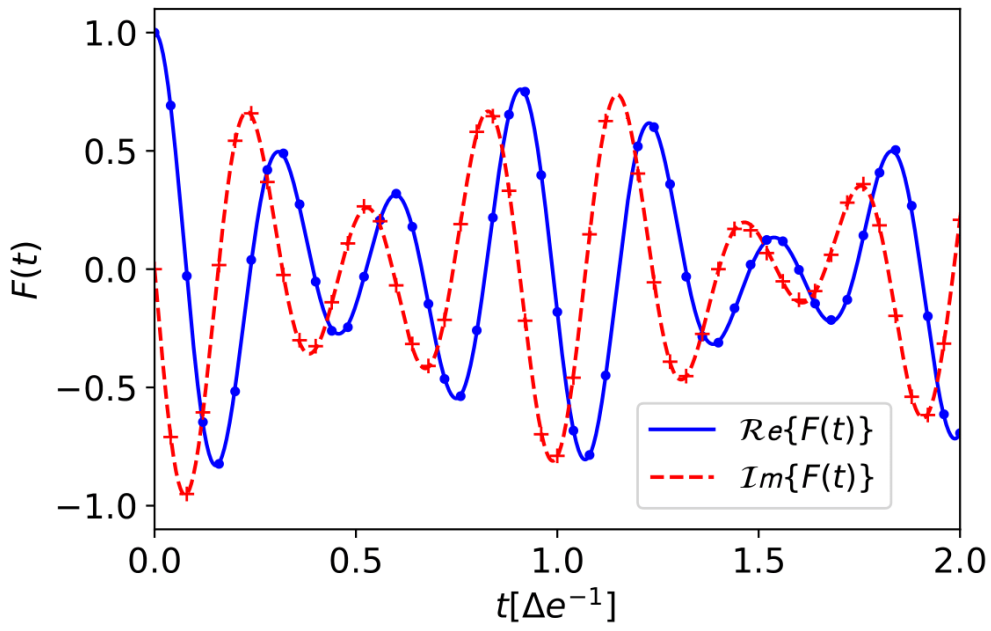

Hubbard

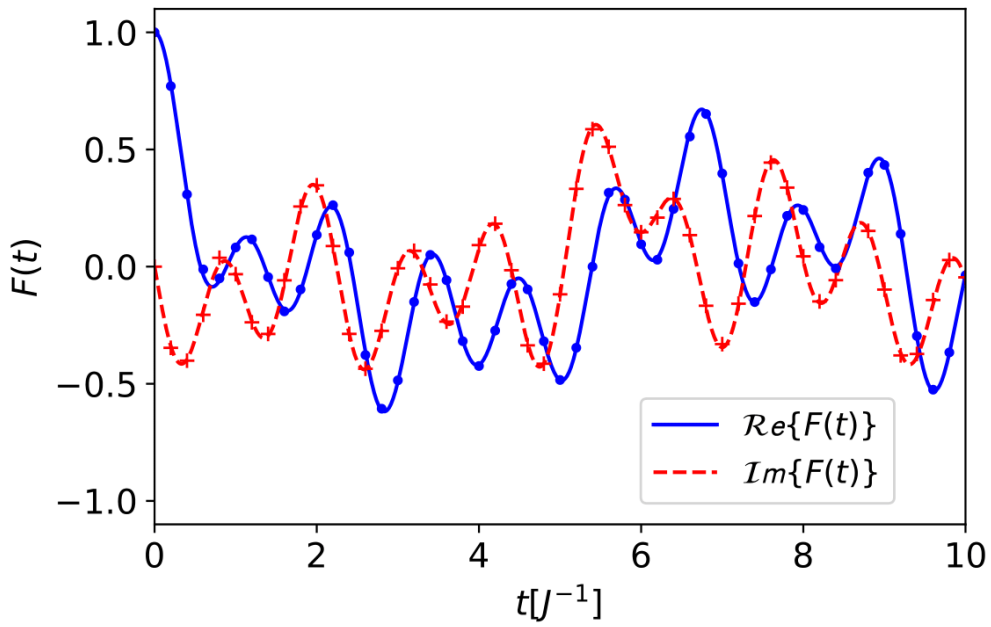

- Points → Average of 10^4 measurements on a perfect quantum computer.
- Lines → Exact results.

université PARIS-SACLAY

Quantum Krylov

Moments $\langle H^k \rangle$

Cristian L. Cortes et al.
Phys. Rev. A **105**, 022417 (2022)

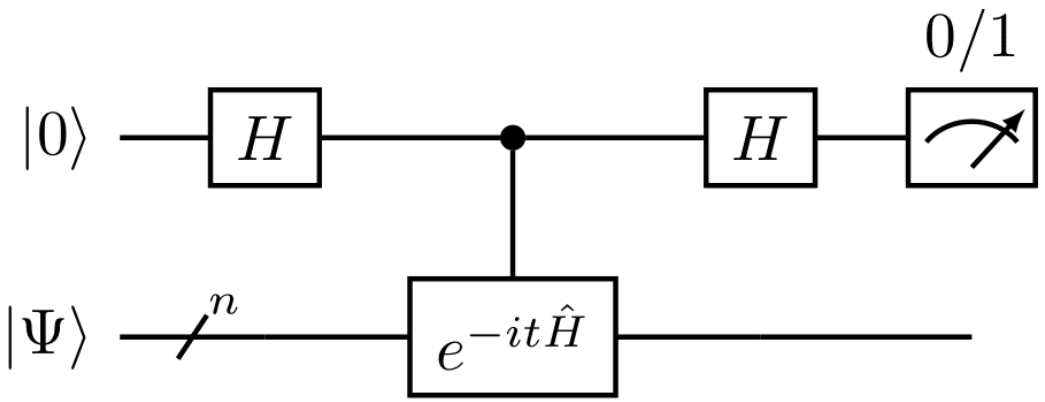

- Change of basis → Krylov basis of size M:

$$\{\chi_j\} = \{|\Psi\rangle, H|\Psi\rangle, H^2|\Psi\rangle, \dots, H^{M-1}|\Psi\rangle\}$$

- $\langle \chi_m | H | \chi_n \rangle = \langle \Psi | H^{m+n+1} | \Psi \rangle = i^{m+n+1} \left. \frac{d^{m+n+1} F(t)}{dt^{m+n+1}} \right|_{t=0}$

- Diagonalization of $\langle \chi_m | H | \chi_n \rangle$ in reduced space→ Approximated E_k

- E.g. 8 levels, 4 particles.

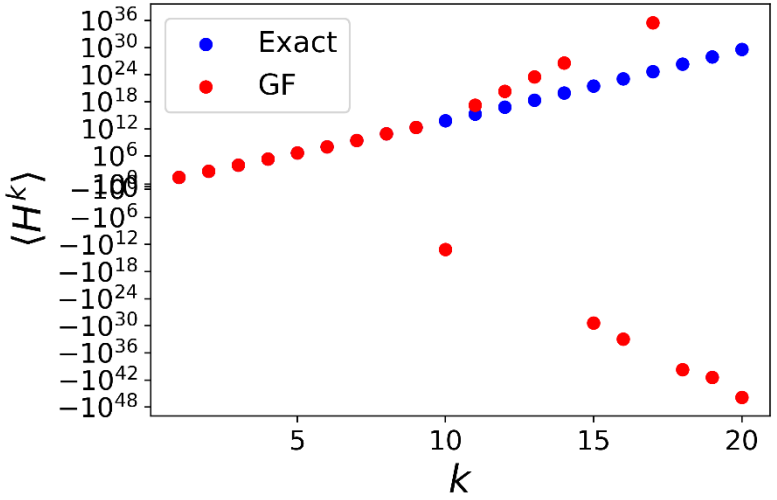

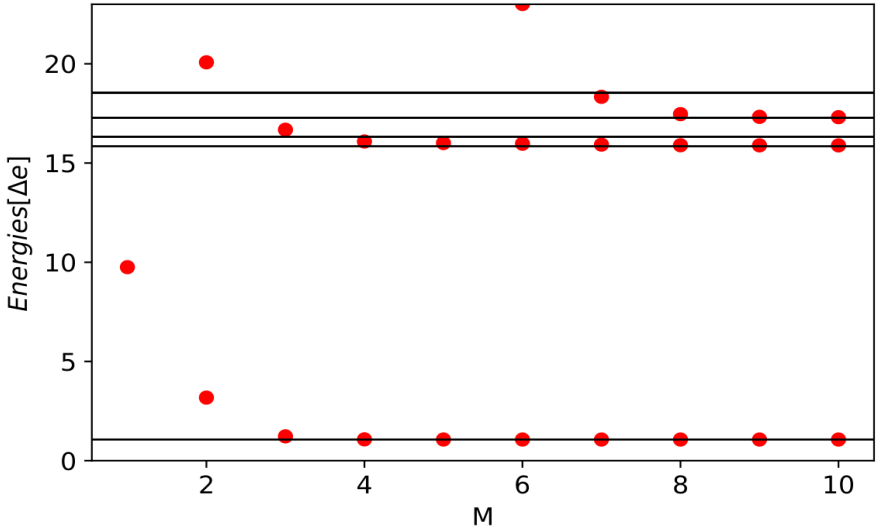

E. A. Ruiz Guzman and D. Lacroix, arXiv:2104.08181.

université PARIS-SACLAY

Quantum Krylov
Evolutions $\langle He^{\tau} \rangle$

Cristian L. Cortes et al.
Phys. Rev. A **105**, 022417 (2022)

- Change of basis → Krylov basis of size M:

$$\{\Phi_j\} = \{|\Psi\rangle, e^{-i\tau_1 H}|\Psi\rangle, \dots, e^{-i\tau_{M-1} H}|\Psi\rangle\}$$

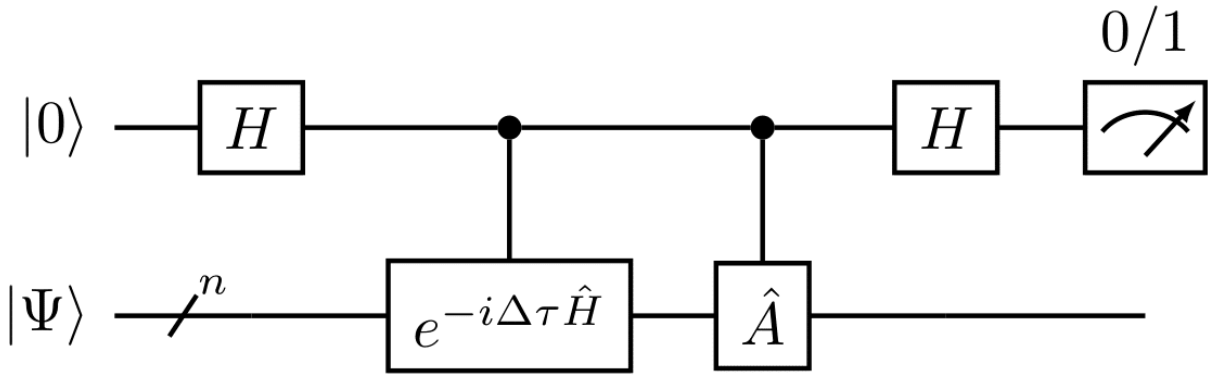

- Hadamard Test → $\langle \Phi_m | H | \Phi_n \rangle = \langle \Psi | H e^{-i(\tau_m - \tau_n)H} | \Psi \rangle$

E. A. Ruiz Guzman and D. Lacroix,
Phys. Rev. C **105**, 024324 (2022)

- Diagonalization of $\langle \Phi_i | H | \Phi_j \rangle$ in reduced space
  → Approximated E_k

- E.g. 8 levels, 4 particles. $\tau_p = p * 0.3$

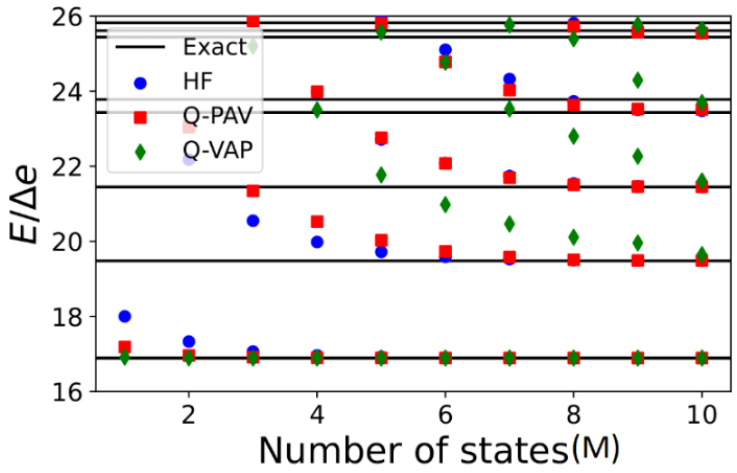

universite PARIS-SACLAY

Evolution of the survival probability

- $P_M(|\psi_0\rangle) = |\langle\psi_0|\psi(t)\rangle|^2$

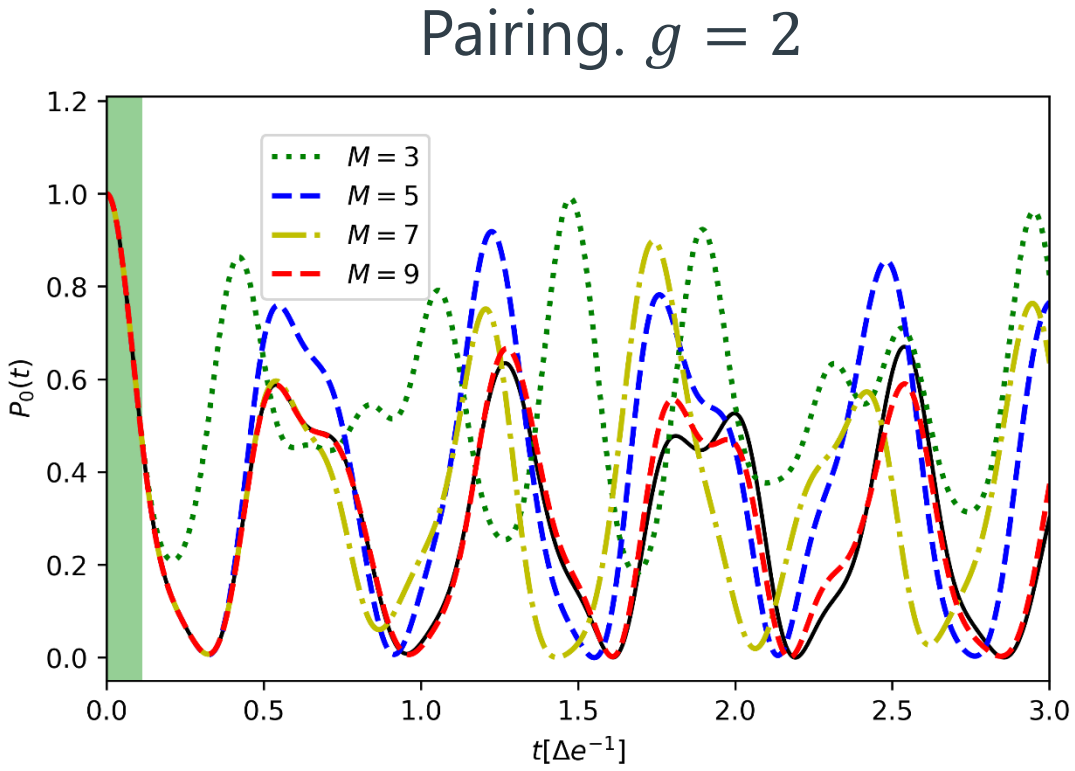

E. A. Ruiz Guzman and D. Lacroix, arXiv:2104.08181. (2021)

Imaginary time evolution

D. Horn and M. Weinstein, Phys. Rev. D 30, 1256 (1984)

Kazuhiro Seki, Seiji Yunoki, Phys. Rev. X Quantum 2, 010333 (2021)

- Ground state energy:

$$E_{GS} = \lim_{\tau\to\infty} \langle\psi(\tau)|\hat{H}|\psi(\tau)\rangle = \lim_{\tau\to\infty} E(\tau)$$

with $|\psi(\tau)\rangle = \frac{e^{-\tau/2\hat{H}}}{\sqrt{\langle\psi_0|e^{-\tau\hat{H}}|\psi_0\rangle}}|\psi_0\rangle$.

- Taylor approximation of $\dot{E}(\tau)$:

$$\frac{dE(\tau)}{d\tau} \approx -\sum_{\mathrm{n}=0}^{L} \frac{(-\tau)^{\mathrm{n}}}{\mathrm{n}!}\kappa_{\mathrm{n}+2}$$

$\{\langle H^{\mathrm{n}}\rangle\}_{L+2} \to \{\kappa_{\mathrm{n}}\}_{L+2}$ and $\{\kappa_n\}$ cumulants.

- Padé approximation [m,n]:

$$P_{mn}(\tau) = \frac{\sum_{j=0}^{m} a_j \tau^j}{\sum_{j=0}^{n} b_j \tau^j}$$

université PARIS-SACLAY

Imaginary time evolution-Results

E. A. Ruiz Guzman and D. Lacroix, arXiv:2104.08181. (2021)

- $L = 10 \rightarrow \{\langle H^k \rangle\}_{12}$
- $\frac{dE(\tau)}{d\tau} = \dot{E}(\tau)$

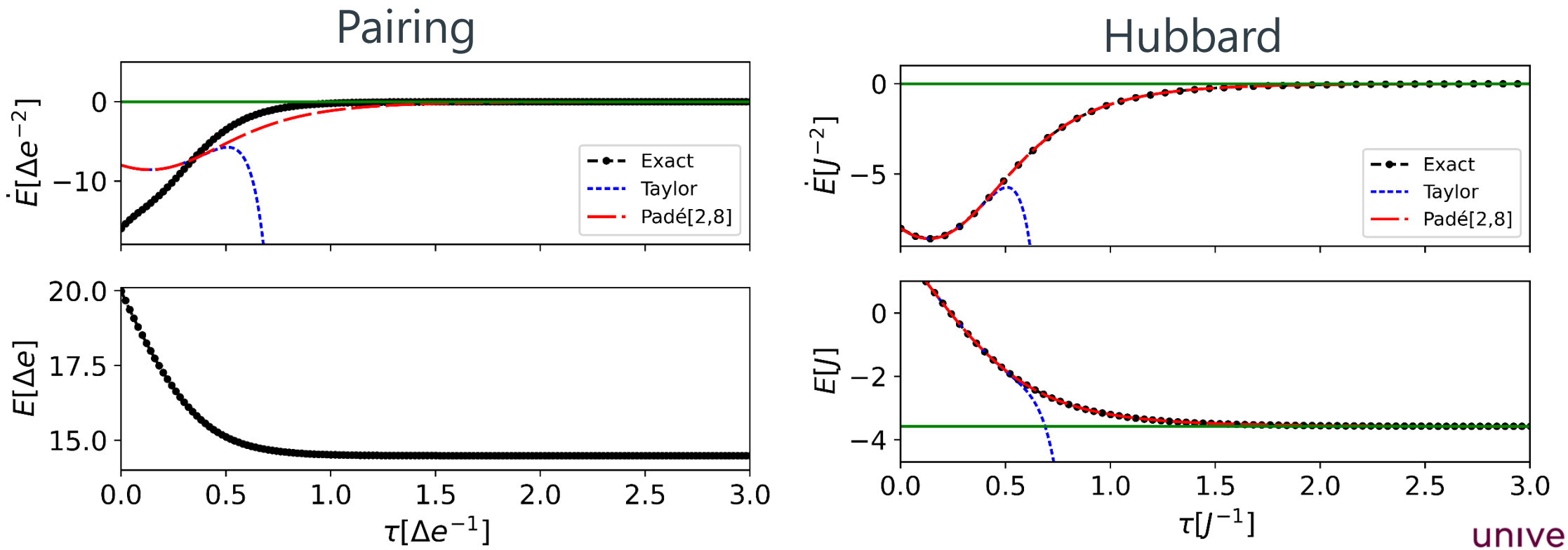

université PARIS-SACLAY

5. Alternative methods for symmetry restoration

Symmetry restoration on a given number of particles with the IQPE-like method

- Iterative-QPE(IQPE)-like:

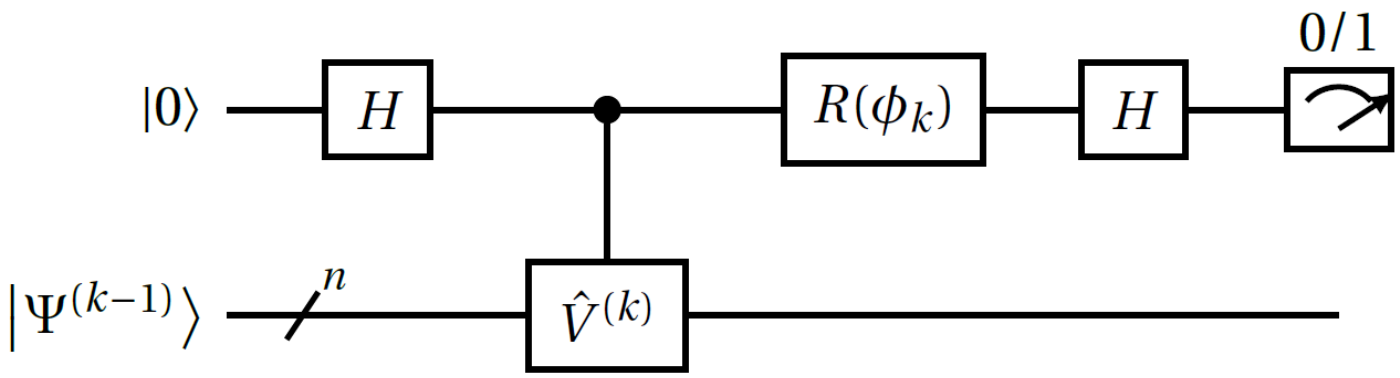

$$\hat{V}^{(k)} = e^{i\phi_k \hat{N}} = \bigotimes_{p=0}^{n_q-1} R(\phi_k) \qquad \phi_k = \frac{\pi}{2^k}$$

At most $n_{IQPE} = \lfloor \log_2(n) \rfloor + 1$

E.g. 16 qubits, $A = 8$

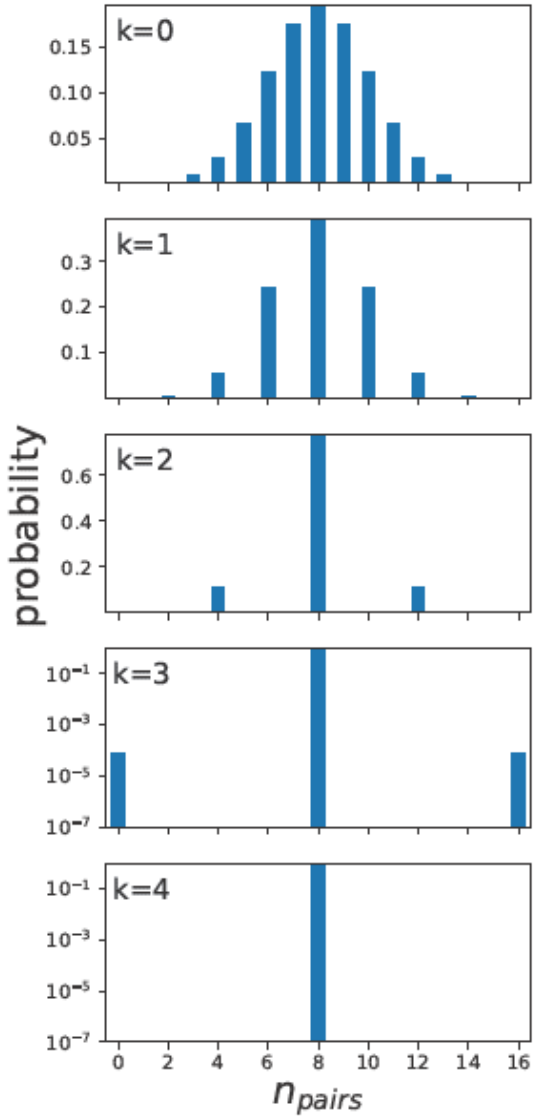

D. Lacroix, E. A. Ruiz, P. Siwach, arXiv:2208.11567 (2022)

Symmetry restoration on a given number of particles by Amplitude Amplification

Lov K. Grover, Phys. Rev. Lett. **79**, 325 (1997)

Peter Hoyer, Phys. Rev. **A 62**, 052304 (2000)

- Grover operator:

$$\hat{G} = \hat{R}_\Psi \hat{U}_f$$

$$\hat{U}_f|k\rangle = (-1)^x \text{ with } x \begin{cases} 0 & if \ \ |k\rangle \in |\Psi_B\rangle \\ 1 & if \ \ |k\rangle \in |\Psi_G\rangle \end{cases}$$

$$|\Psi_{G/B}\rangle = \{|k\rangle \text{ such that: } \hat{N}|k\rangle = / \neq A|k\rangle\}$$

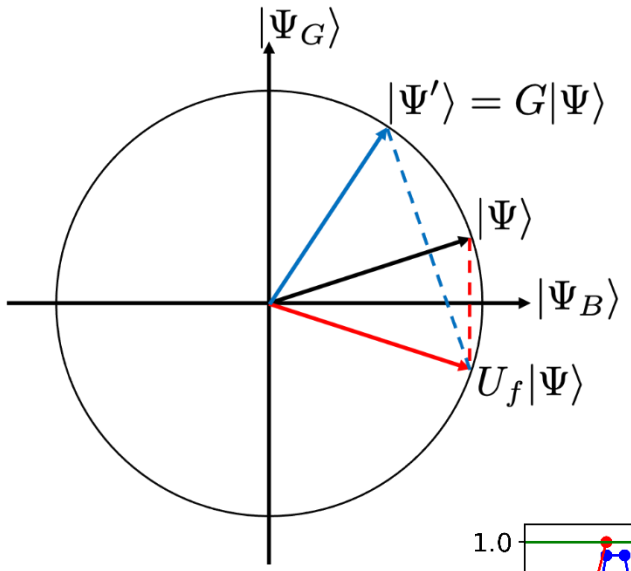

- E.g. $p_n = \left|\langle\Psi_G|\hat{G}^n|\Psi\rangle\right|^2$, 8 qubits, $A = 4$ and $\theta = \angle|\Psi\rangle|\Psi_B\rangle = \frac{\pi}{4}$.

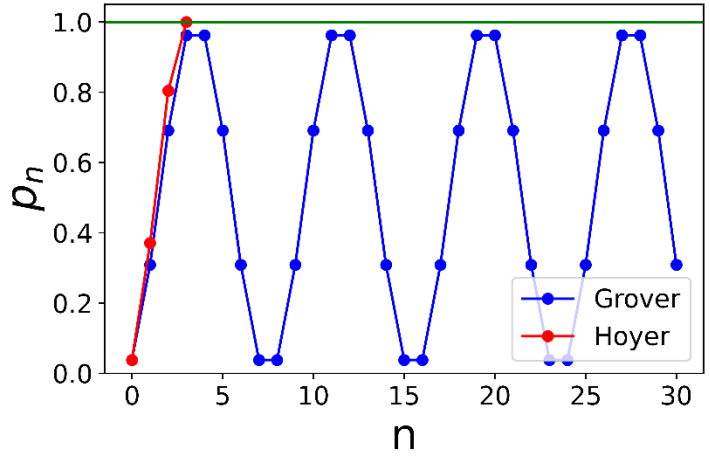

- Grover/Hoyer method:

$$n_G = \left\lceil \frac{w}{2\theta} \right\rceil \qquad w = \frac{\pi}{2} - \theta \qquad p_{n_G} = 1$$

D. Lacroix, E. A. Ruiz, P. Siwach, arXiv:2208.11567 (2022)

université PARIS-SACLAY

Symmetry restoration on a given number of particles by Oracle+Hadamard Test

- Oracle+Hadamard projection:

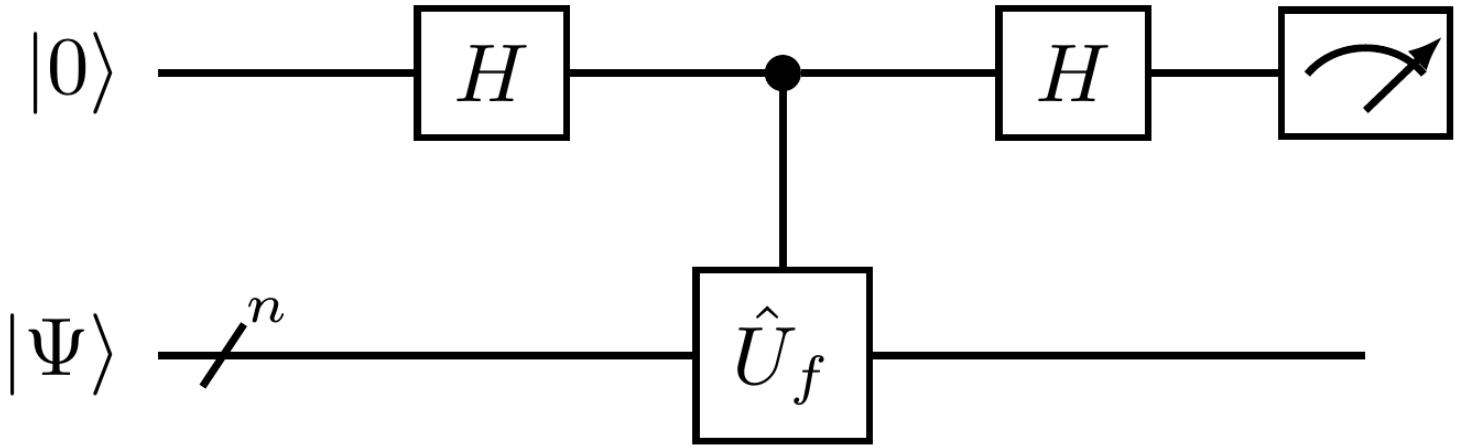

$$\frac{1}{2}\left\{|0\rangle \otimes \left[I + \hat{U}_f\right]|\Psi\rangle + |1\rangle \otimes \left[I - \hat{U}_f\right]|\Psi\rangle\right\} = |0\rangle|\Psi_B\rangle + |1\rangle|\Psi_G\rangle$$

D. Lacroix, E. A. Ruiz, P. Siwach, arXiv:2208.11567 (2022)

Symmetry restoration on a given number of particles
Generic Projector as Linear Combination of Unitaries(LCU)

- Symmetry operator $\hat{S}$ with eigenvalues $\lambda_1, \lambda_2, \dots, \lambda_\Omega$. Generic projector:

$$\hat{\mathcal{P}}_\alpha = \sum_{k=0}^{M} \beta_k e^{i\phi_k \hat{S}} \qquad \beta_k = \frac{1}{M+1} e^{-i\phi_k(\xi_\alpha + \lambda_1)} \qquad \phi_k = \frac{2\pi k}{a(M+1)}$$

with $\xi_\alpha = \lambda_\alpha - \lambda_1 = a m_\alpha$, $m_\alpha \in [0, m_\Omega]$ and $\mathrm{M} = m_\Omega$.

- If $\hat{S} = \hat{\mathrm{N}}$:

$$\hat{\mathcal{P}}_N = \frac{1}{n_q+1} \sum_{k=0}^{n_q} e^{i\phi_k \hat{N}} \qquad \phi_k = \frac{2\pi k}{n_q+1}$$

E. A. Ruiz, D. Lacroix, arXiv:2210.11181 (2022)

Symmetry restoration on a given number of particles
Generic Projector as Linear Combination of Unitaries(LCU)

- $\hat{\mathcal{P}}_{n_k}|\Psi(n_0, n_1, \dots, n_q)\rangle = |\Psi(n_k)\rangle$

$$\hat{B}|0\rangle^{\otimes n_{LCU}} = \frac{1}{\mathcal{N}} \sum_{k=0}^{2^{n_{LCU}}-1} \beta_k |k\rangle$$

$$\hat{G}_k = e^{i\phi_k \hat{S}}$$

with $\mathcal{N} = \sqrt{\sum_k |\beta_k|^2}$, $\beta_{k>M} = 0$ and $\hat{G}_{k>M} = I$.

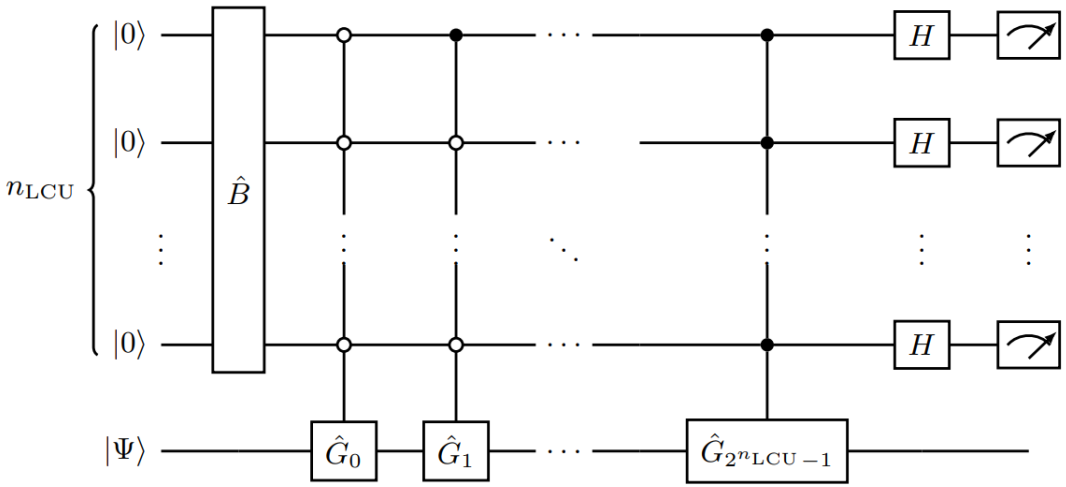

G.L. Long, Theor. Phys. **45**, 825-844 (2006)

S. Wei, H. Li, and G. Long, Research, **2020** , (2020)

- Projected expected value of $\hat{\mathrm{H}} = \sum_{j=0} \gamma_j \hat{V}_j$:

$$\langle\Psi|\hat{H}\hat{\mathcal{P}}_{n_k}|\Psi\rangle = \sum_{k,j} \gamma_j \beta_k \langle\Psi|\hat{V}_j \hat{G}_k|\Psi\rangle$$

E. A. Ruiz, D. Lacroix, arXiv:2210.11181 (2022)

université PARIS-SACLAY

Symmetry restoration on a given number of particles
Generic Oracle as Linear Combination of Unitaries(LCU)

- $\hat{O}_\alpha(\varphi,\mu) = e^{i\mu}\left(\hat{I} - \hat{\mathcal{P}}_\alpha\right) + e^{i\varphi}\hat{\mathcal{P}}_\alpha$

$$\hat{O}_\alpha(\varphi,\mu)|\Phi_k\rangle = \begin{cases} e^{i\varphi} & if \quad \hat{S}|\Phi_k\rangle = \lambda_\alpha|\Phi_k\rangle \\ e^{i\mu} & if \quad \hat{S}|\Phi_k\rangle \neq \lambda_\alpha|\Phi_k\rangle \end{cases}$$

- Projected expected value of $\hat{\mathrm{H}} = \sum_{j=0}\gamma_j\hat{V}_j$. If $\hat{\mathrm{H}}$ Hermitian and $\hat{U} = \hat{V}_j$:

$$\left\langle\Psi\left|\hat{H}\hat{O}_\alpha\left(\varphi = 0, \mu = \frac{\pi}{2}\right)\right|\Psi\right\rangle = \langle\Psi|\hat{H}\hat{\mathcal{P}}_\alpha|\Psi\rangle = p_0 - p_1$$

No wasted events

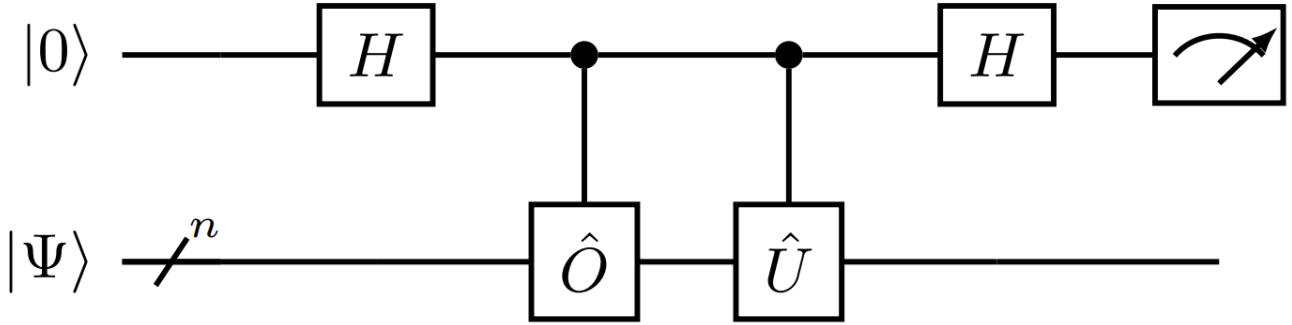

E. A. Ruiz, D. Lacroix, arXiv:2210.11181 (2022)

Comparison of symmetry restoration methods

	# Ancilla	# Measurements	Gate resources	Ranking
QPE	$n_{QPE} = \lfloor \log_2 n_q \rfloor$	$\sim p_G = \langle \Psi_G \vert \Psi_G \rangle$	M, controlled $e^{i\phi_k \hat{N}}$ $QFT^\dagger$	2
LCU	$n_{LCU} = \lfloor \log_2 (M+1) \rfloor$	$\sim p_G$	M, n_{LCU}-controlled $e^{i\phi_k \hat{N}}$	4
Grover/Hoyer	0	-	2 general oracles n_G general $\hat{G}$, each: - 1 general oracle - 2 QSP over n_q qubits.	5
IQPE-like	1	$\sim p_G$	At most n_{IQPE} IQPE-like circuits	1
Oracle+Hadamard	1	$\sim p_G$	1 controlled Oracle $\hat{U}_f$	3

D. Lacroix, E. A. Ruiz, P. Siwach, arXiv:2208.11567 (2022)

Conclusions

- We have implemented the Quantum Projection After Variation (Q-PAV) method and the Quantum Variation After Projection (Q-VAP) method. Both processes can be applied to any ansatz.

- Several post-processing methods have been explored to recover approximations of the ground and excited states energies of a Hamiltonian. An approximation of the evolution of $|\psi\rangle$ can be obtained with the Quantum Krylov method.

- Many approaches to performing projection have been presented. The IQPE-like approach presents itself as the best compromise in terms of resources.

Questions ?

Why solve many-body problems using quantum computers?

Smith, A., Kim, M.S., Pollmann, F. *et al.*
npj Quantum Inf 5, 106 (2019).

Sam McArdle et al. Rev. Mod. Phys. 92, 015003 (2020).

- Resources for the description of the configuration space :

Classical computer → exponential scaling.

Quantum computer → polynomial scaling.

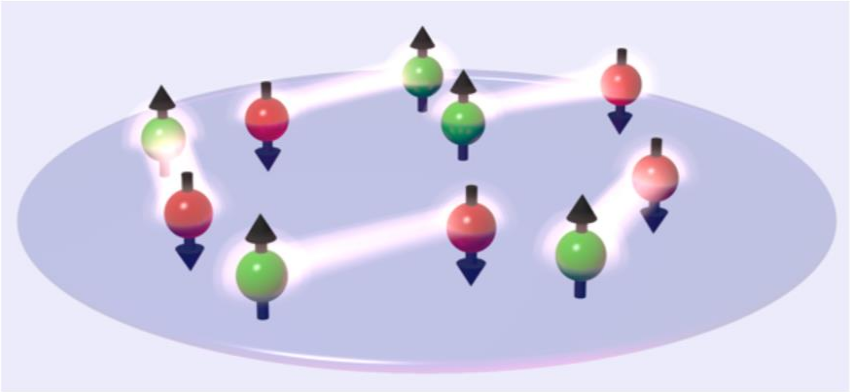

https://www.uni-heidelberg.de/presse/news2016/pm20160128_what-are-the-special-properties-of-an-atomic-gas.html

- Various quantum algorithms that have up to an exponential speed-up over their classical counterparts.

Montanaro, A.
npj Quantum Inf 2, 15023 (2016).

- Dynamical quantum computing ecosystem with real devices available for the public and constantly improving.

Application on real platforms

IBM experience

- Public access to quantum computers
- Superconducting transmon qubits

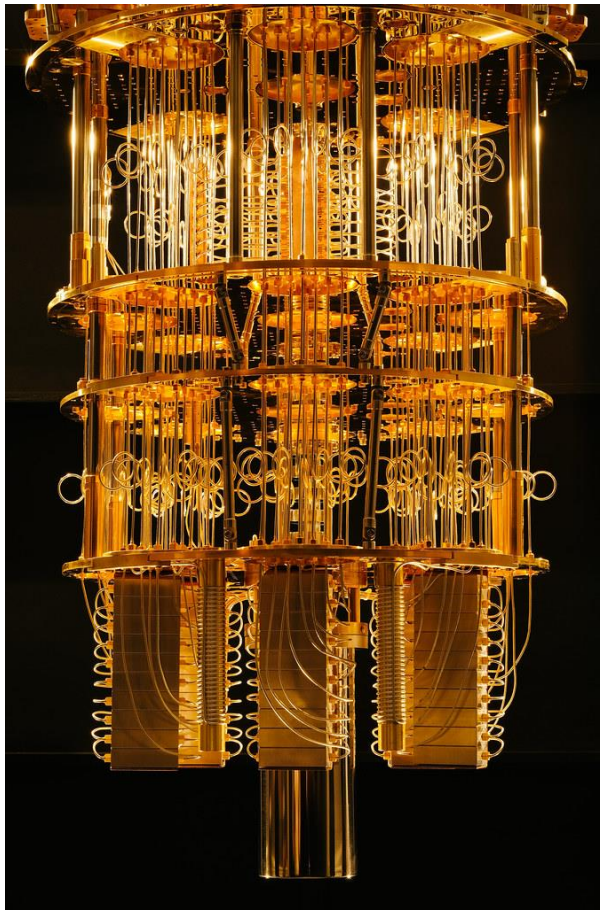

https://pulsenews.co.kr/view.php?year=2019&no=321975

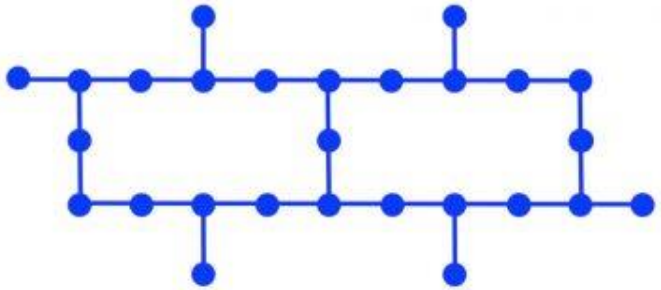

Paris
Montreal
Toronto

Athens
Bogota
Rome
Santiago

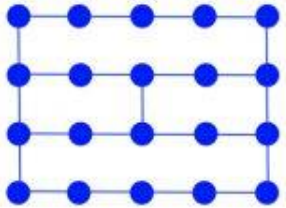

Johannesburg

Transpiling

- Basic gates (IBMQ Santiago CX, RZ, SX, X)

- Topology (IBMQ Santiago )

Written

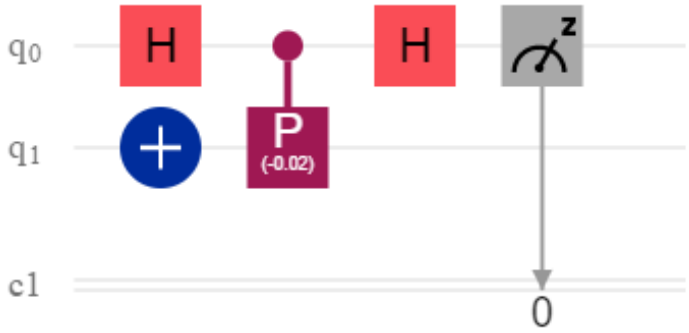

→

Implemented

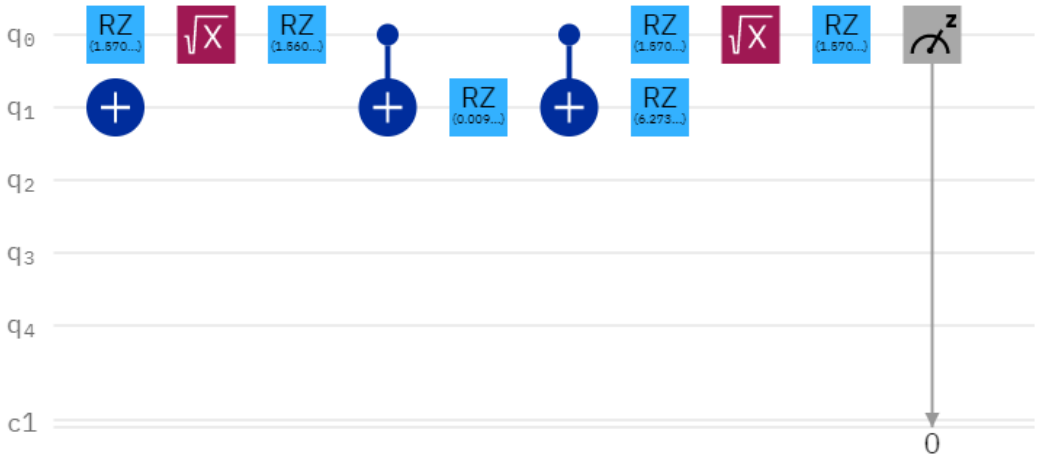

Generating function on a Quantum Computer

E. A. Ruiz Guzman and D. Lacroix, arXiv:2104.08181. (2021)

- FakeSantiago.
- $F(t)$ without *(Blue)* and with *(Red)* error correction.
- Classical *(Black)*. Quantum *(Green)*.

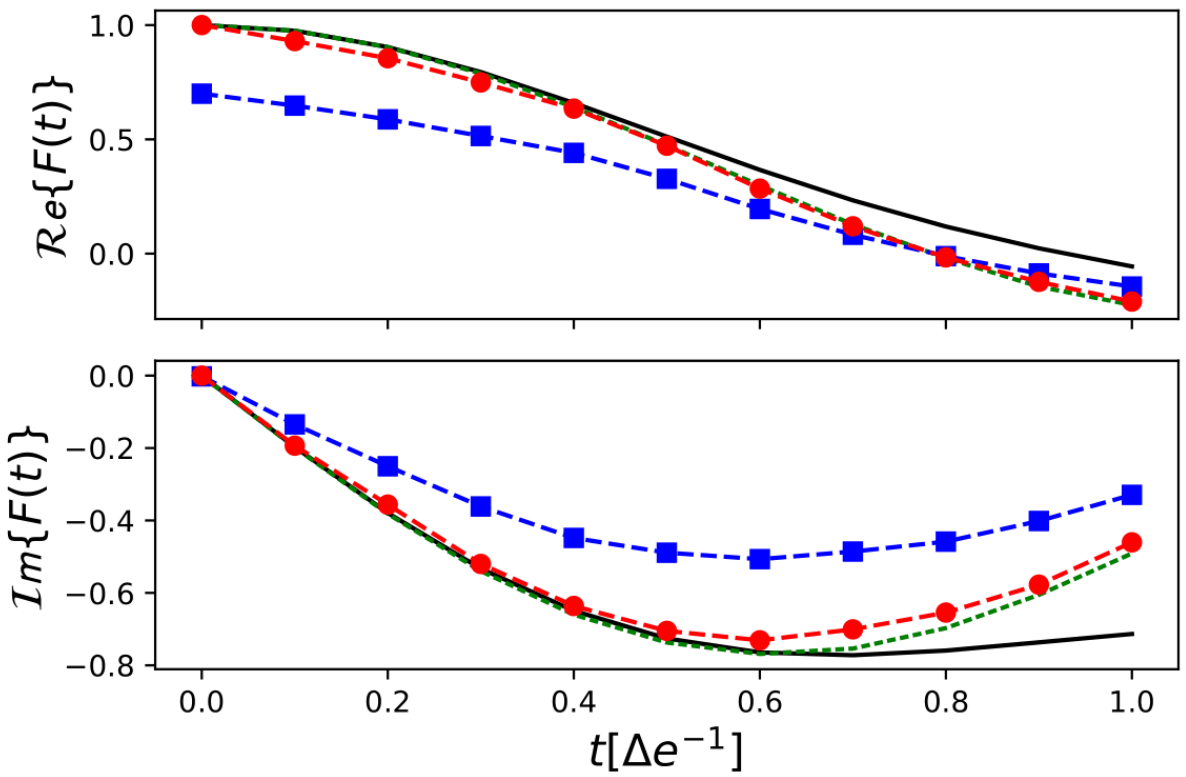

université PARIS-SACLAY