THE HUBBARD-STRATONOVICH TRANSFORMATION IN QUANTUM COMPUTING

Luca Vespucci

Quantum Science and Technology in Trento

EUROPEAN CENTRE FOR THEORETICAL STUDIES IN NUCLEAR PHYSICS AND RELATED AREAS

INTRODUCTION

MOTIVATION

- Reformulating many-qubit gates in terms of a classical combination of fewer-qubit gates

INTERESTING POINTS

- Entanglement with single-qubit gates and classical manipulation

3 OVERVIEW OF QUANTUM DIGITAL COMPUTING

- <u>Gates</u>: $\hat{G} : \mathscr{H} \to \mathscr{H}$ $\qquad \mathscr{H} = \bigotimes_i \mathscr{H}_i$

$$|\psi\rangle \mapsto |\psi'\rangle = \hat{G}\,|\psi\rangle$$
$$= e^{-i\frac{t}{\hbar}\hat{H}}\,|\psi\rangle \qquad t \in \mathbb{R}$$

- <u>Solovay-Kitaev theorem</u>: Universal set of one- and two-qubit gates only

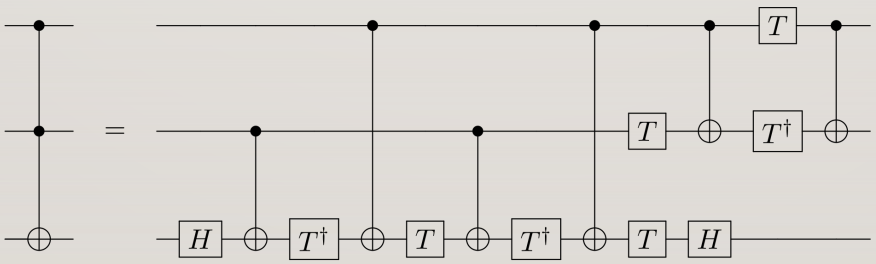

- <u>Accuracy</u> (fidelity): $\mathscr{F}(\text{1-qubit}) \gg \mathscr{F}(\text{2-qubit})$

4 HUBBARD-STRATONOVICH TRANSFORMATION

- Exact mathematical transformation: $$e^{-\frac{y^2}{2}} = \int_{-\infty}^{\infty} \frac{1}{\sqrt{2\pi}} e^{-\frac{x^2}{2}} e^{\pm ixy} dx$$
- Quantum propagators:

$$\boxed{\underbrace{e^{-t\frac{\hat{H}^2}{2}}}_{\hat{G}^H} = \int_{-\infty}^{\infty} \frac{1}{\sqrt{2\pi}} e^{-\frac{x^2}{2}} \underbrace{e^{ix\sqrt{t}\hat{H}}}_{\hat{G}_x^H} dx}$$

$$\boxed{\mathbb{C} \ni t = t_i + it_r}$$

- Implement any <u>«quadratic Hamiltonian» gate</u> using only a combination of **«linear Hamiltonian» gates** and a **classical auxiliary field**

5 FIRST EXAMPLE – ENTANGLING OPERATOR

- $\hat{G}^H = C\hat{N}OT \cdot \hat{\mathrm{HA}} \otimes \hat{\mathbb{1}} = e^{-\frac{\hat{H}^2}{2}}$

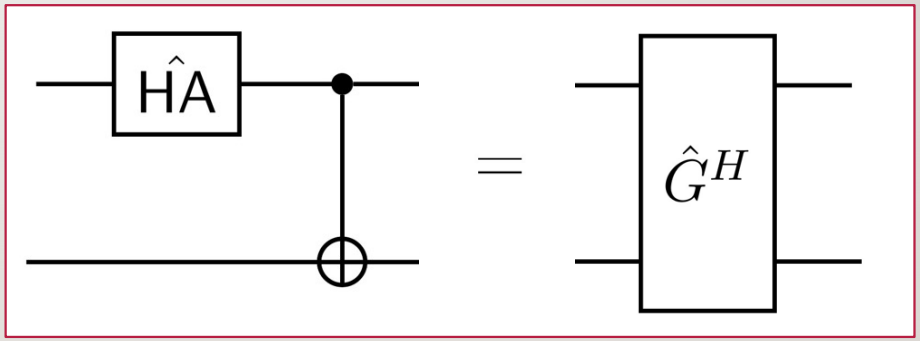

$$\hat{G}^H |00\rangle = \frac{1}{\sqrt{2}} (|00\rangle + |11\rangle)$$

$$\longrightarrow \quad \hat{G}^H = e^{-\frac{\hat{H}^2}{2}} = \int_{-\infty}^{\infty} dx \frac{1}{\sqrt{2\pi}} e^{-\frac{x^2}{2}} \underbrace{e^{ix\hat{H}}}_{\hat{G}_x^H}$$

$\hat{G}_x^H$ still <u>2-qubit operators $\forall x$</u>

$\Longrightarrow$ **no optimization**

6 USEFUL TRANSFORM

- Implement <u>many-qubit gates</u> by only means of one-qubit gates

$$\hat{G}^H \doteq e^{-t\hat{H}^2} = e^{-\frac{1}{2}\left(\sqrt{t}\sum_{i=1}^{N}\hat{O}_i\right)^2} = \int dx \frac{1}{\sqrt{2\pi}} e^{-\frac{x^2}{2}} \underbrace{e^{ix\sqrt{t}\sum_{i=1}^{N}\hat{O}_i}}_{\hat{G}_x^H} =$$

$$= \int dx \frac{1}{\sqrt{2\pi}} e^{-\frac{x^2}{2}} \underbrace{\bigotimes_{i=1}^{N} e^{ix\sqrt{t}\hat{\tilde{O}}_i}}_{\hat{G}_x^H}$$

7 USEFUL APPLICATION

- Bilinear form: $\hat{H} = \frac{1}{2}\sum_{i,j=1}^{M} \hat{O}_i^{(n_i)} A_{ij} \hat{O}_j^{(n_j)} = \frac{1}{2}\sum_{k=1}^{M} \lambda_k \hat{\mathcal{O}}_k^2 = \sum_{k=1}^{M} \hat{H}_k$

$$\begin{cases} A_{ij} = \sum_{k=1}^{M} \psi_i^{[k]} \lambda_k \psi_j^{[k]} \\ \hat{\mathcal{O}}_k \doteq \sum_{i=1}^{M} \psi_i^{[k]} \hat{O}_i^{(n_i)} \end{cases}$$

- Evolution (<u>Trotter decomposition</u>):

$$\hat{G}^H = e^{-t\hat{H}} = \prod_{j=1}^{n} e^{-dt\hat{H}} = \prod_{j=1}^{n} e^{-dt\sum_{k=1}^{M}\hat{H}_k} = \prod_{j=1}^{n}\prod_{k=1}^{M} e^{-dt\hat{H}_k} + O(dt^2) \approx \left(\prod_{k=1}^{M} d\hat{G}_k^H\right)^n$$

Each $d\hat{G}_k^H$ as before $\implies$ only one-qubit operators

8 SECOND EXAMPLE – ENTANGLING, HS SEPARABLE

- 2 qubits, Spin-Spin Hamiltonian: $\hat{H} = \hat{\vec{\sigma}}^{(1)} \cdot \hat{\vec{\sigma}}^{(2)} = \frac{\sum_{i=x,y,z} \left(\hat{\sigma}_i^{(1)} + \hat{\sigma}_i^{(2)}\right)^2}{2} - 3$

- Evolution: $\hat{G}^H = e^{-t\hat{\vec{\sigma}}^{(1)} \cdot \hat{\vec{\sigma}}^{(2)}} = e^{3t} \prod_{i=x,y,z} \underbrace{e^{-t\frac{\left(\hat{\sigma}_i^{(1)} + \hat{\sigma}_i^{(2)}\right)^2}{2}}}$

$$e^{-t\frac{\left(\hat{\sigma}_i^{(1)} + \hat{\sigma}_i^{(2)}\right)^2}{2}} = \int dx \frac{1}{\sqrt{2\pi}} e^{-\frac{x^2}{2}} e^{ix\sqrt{t}\hat{\sigma}_i} \otimes e^{ix\sqrt{t}\hat{\sigma}_i}$$

- Entanglement: $\hat{G}^H |01\rangle = e^t \left(\cos(2it) |01\rangle + i \sin(2it) |10\rangle\right)$

$$\vec{\sigma}_1 \cdot \vec{\sigma}_2 \begin{cases} |11\rangle \\ |+\rangle \\ |00\rangle \end{cases} = 1 \begin{cases} |11\rangle \\ |+\rangle \\ |00\rangle \end{cases}$$

$$\vec{\sigma}_1 \cdot \vec{\sigma}_2 |-\rangle = -3|-\rangle$$

$$|01\rangle = \frac{1}{\sqrt{2}}(|+\rangle + |-\rangle)$$

9 UNITARITY

- HS, bilinear $\hat{H}$:

$$\hat{G}^H = e^{-t\hat{H}} = e^{-\frac{t}{2}\sum_{i,j=1}^{M}\hat{O}_i^{(n_i)}A_{ij}\hat{O}_j^{(n_j)}} \approx \left(\prod_{k=1}^{M}\int_{-\infty}^{\infty} dx \frac{1}{\sqrt{2\pi}} e^{-\frac{x^2}{2}} \overbrace{\bigotimes_{j=1}^{M} e^{ix\sqrt{\lambda_k dt}\psi_j^{[k]}\hat{\tilde{O}}_j^{(n_j)}}}^{d\hat{G}^H_{x,k}}\right)^n$$

$$dt = dt_i + i\, dt_r$$

<u>Real time</u> or <u>negative eigenvalues</u> $\Longrightarrow$ **non unitary** operators

- Ancillas:

$$d\hat{G}^{H(\text{tot})}_{x,k} \doteq \left[\hat{\mathbb{1}}_2 \otimes \frac{1}{\sqrt{(d\hat{G}^H_{x,k})^2 + \hat{\mathbb{1}}_{dim(d\hat{G}^H_{x,k})}}}\right] \begin{pmatrix} d\hat{G}^H_{x,k} & \hat{\mathbb{1}}_{dim(d\hat{G}^H_{x,k})} \\ \hat{\mathbb{1}}_{dim(d\hat{G}^H_{x,k})} & -d\hat{G}^H_{x,k} \end{pmatrix} \leftarrow \underline{\text{unitary}}$$

$$\overbrace{\left(|0\rangle\langle 0| \otimes \hat{\mathbb{1}}\right)}^{\hat{M}} d\hat{G}^{H(\text{tot})}_{x,k} \; |0\rangle \otimes |\psi_s\rangle \;\propto\; |0\rangle \otimes d\hat{G}^H_{x,k}|\psi_s\rangle$$

QITP:
F. Turro, V. Amitrano, P. Luchi et al. , Phys. Rev. A 105, 022440 (2022)

10 IDEAL SIMULATION - REAL TIME EVOLUTION

$$\hat{G}^H \doteq e^{-i\hat{\vec{\sigma}}^{(1)}\cdot\hat{\vec{\sigma}}^{(2)}t}$$

$$\boxed{t \in \mathbb{R}}$$

$$\hat{G}^H |01\rangle = e^{it}\left(\cos(2t)\,|01\rangle - i\sin(2t)\,|10\rangle\right)$$

$$\vec{\sigma}_1 \cdot \vec{\sigma}_2 \begin{cases} |11\rangle \\ |+\rangle \\ |00\rangle \end{cases} = 1 \begin{cases} |11\rangle \\ |+\rangle \\ |00\rangle \end{cases}$$

$$\vec{\sigma}_1 \cdot \vec{\sigma}_2 |-\rangle = -3|-\rangle$$

$$|01\rangle = \frac{1}{\sqrt{2}}(|+\rangle + |-\rangle)$$

$5 \cdot 10^3$ ts

10^4 samples/ts

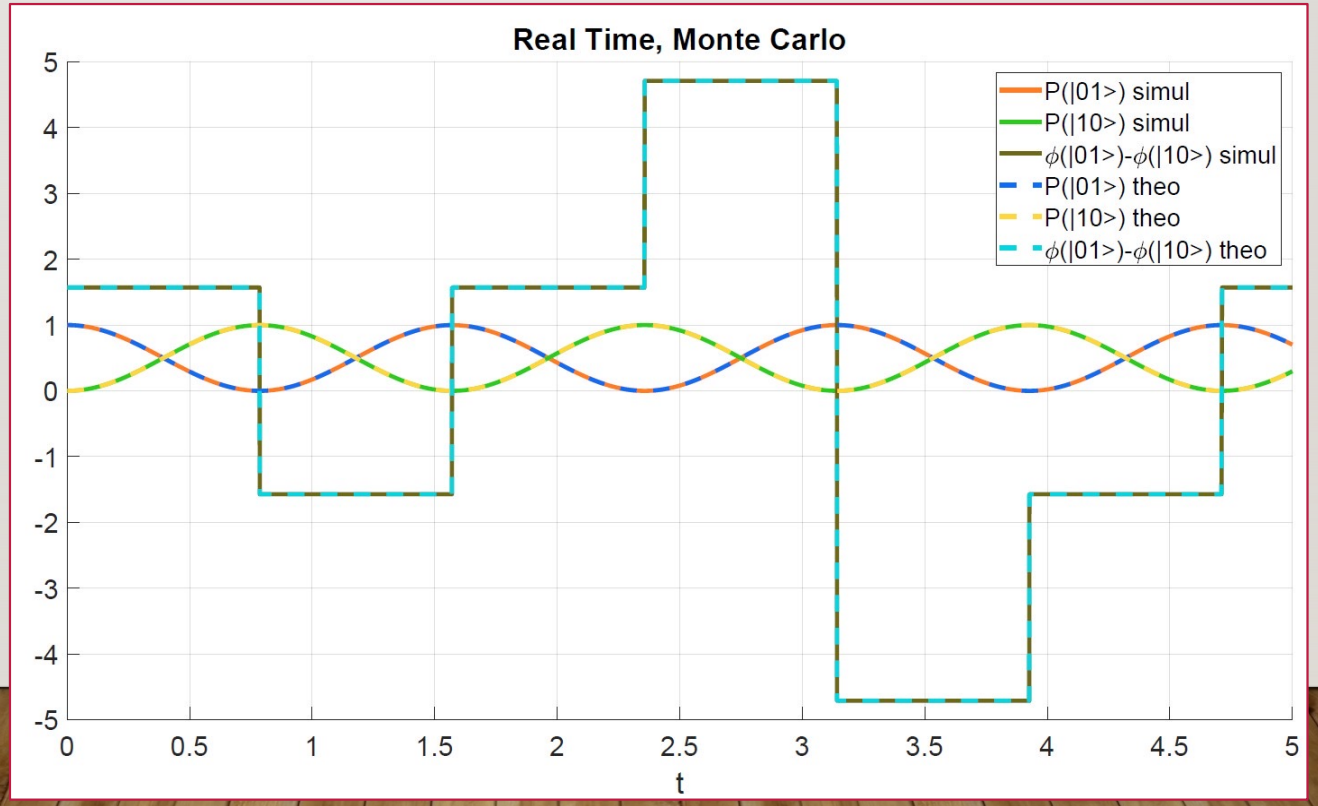

11 IDEAL SIMULATION - IMAGINARY TIME EVOLUTION

$$\hat{G}^H \doteq e^{-i\hat{\vec{\sigma}}^{(1)}\cdot\hat{\vec{\sigma}}^{(2)}t}$$

$$\boxed{\tau \doteq it \in \mathbb{R}}$$

$$\hat{G}^H\,|01\rangle \xrightarrow{\tau\to\infty} \frac{e^{3\tau}}{\sqrt{2}}\,|-\rangle$$

$$\vec{\sigma}_1\cdot\vec{\sigma}_2 \begin{cases} |11\rangle \\ |+\rangle \\ |00\rangle \end{cases} = 1 \begin{cases} |11\rangle \\ |+\rangle \\ |00\rangle \end{cases}$$

$$\vec{\sigma}_1\cdot\vec{\sigma}_2|-\rangle = -3|-\rangle$$

$$|01\rangle = \frac{1}{\sqrt{2}}(|+\rangle + |-\rangle)$$

$5\cdot 10^3$ ts

10^4 samples/ts

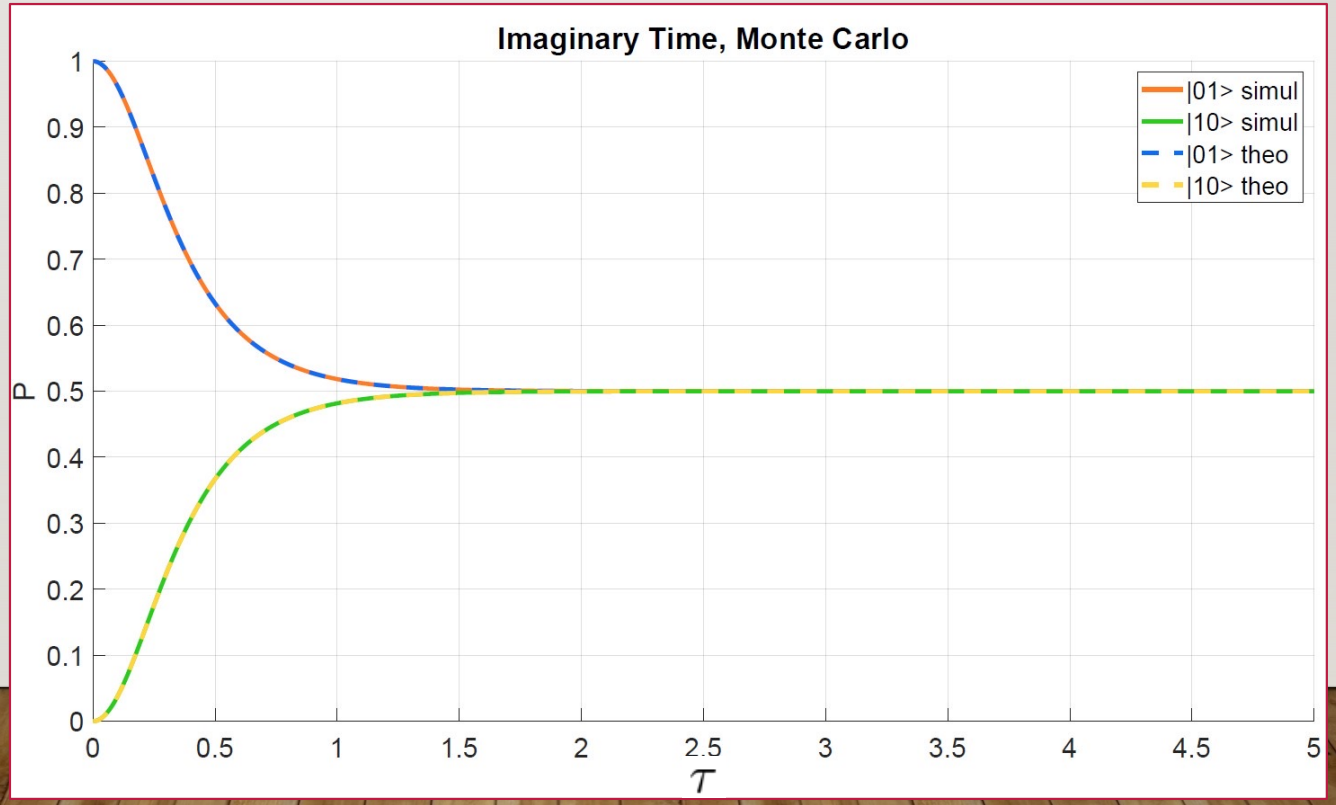

DENSITY MATRICES EVOLUTION WITH HS

13 MIXED STATES

- Density matrices: statistical mixture of pure states

$$|\psi\rangle \longrightarrow \hat{\rho} \doteq \sum_i \mathbb{P}_i \, |\psi_i\rangle \langle\psi_i| \qquad \mathbb{P}_i \text{ probabilities, } \{|\psi\rangle_i\}_i \text{ o.n.b. of } \mathscr{H}$$

- Evolution:

$$\hat{\rho}_t \doteq \hat{U}_t \hat{\rho}_0 \hat{U}_t^\dagger \doteq e^{-i\frac{t}{\hbar}\hat{H}} \hat{\rho}_0 e^{i\frac{t^*}{\hbar}\hat{H}}$$

14 HS EVOLUTION OF DENSITY MATRICES 1/3

- **Exact** identity $\forall \boldsymbol{t} \in \mathbb{C}$ ($[\hat{O}_i, \hat{O}_j] = \delta_{ij}\ \forall\, i,j,\ \ \hat{O}_i = \hat{O}_i^\dagger$):

$$\hat{\rho}_t \doteq \hat{U}_t \hat{\rho}_0 \hat{U}_t^\dagger = e^{-i\frac{t}{2}\left(\sum_{j=1}^n \hat{O}_j\right)^2} \hat{\rho}_0 e^{i\frac{t^*}{2}\left(\sum_{j=1}^n \hat{O}_j\right)^2} =$$

$$= \iint_{-\infty}^{\infty} \frac{e^{-\frac{x^2+z^2}{2}}}{2\pi} e^{ix\sqrt{it}\left(\sum_{j=1}^n \hat{O}_j\right)} \hat{\rho}_0 e^{iz\left(\sqrt{it}\right)^*\left(\sum_{j=1}^n \hat{O}_j\right)} dxdz$$

- I'd like that:

$$\lim_{|t|\to 0} \hat{\rho}_t \stackrel{?}{=} \lim_{|t|\to 0} \hat{\tilde{\rho}}_t \doteq \lim_{|t|\to 0} \int_{-\infty}^{\infty} \frac{e^{-\frac{x^2}{2}}}{\sqrt{2\pi}} e^{ix\sqrt{it}\left(\sum_{j=1}^n \hat{O}_j\right)} \hat{\rho}_0 e^{-ix\left(\sqrt{it}\right)^*\left(\sum_{j=1}^n \hat{O}_j\right)} dx$$

15 HS EVOLUTION OF DENSITY MATRICES 2/3

It <u>doesn't hold</u>!

$$\lim_{|t|\to 0} \hat{\rho}_t = \hat{\rho}_0 + \frac{it^*}{2}\hat{\rho}_0 \left(\sum_{j=1}^{n} \hat{O}_j\right)^2 - \frac{it}{2}\left(\sum_{j=1}^{n} \hat{O}_j\right)^2 \hat{\rho}_0 + O\left(|t|^2\right)$$

$$\lim_{|t|\to 0} \hat{\tilde{\rho}}_t = \hat{\rho}_0 + \frac{it^*}{2}\hat{\rho}_0 \left(\sum_{j=1}^{n} \hat{O}_j\right)^2 - \frac{it}{2}\left(\sum_{j=1}^{n} \hat{O}_j\right)^2 \hat{\rho}_0 - |t| \left(\sum_{j=1}^{n} \hat{O}_j\right) \hat{\rho}_0 \left(\sum_{j=1}^{n} \hat{O}_j\right) + O\left(|t|^2\right)$$

Cause: mixed odd terms do not cancel $\longrightarrow$ Correction: $\hat{\tilde{\rho}} \to \hat{\bar{\rho}}$

$$\lim_{|t|\to 0} \hat{\rho}_t \stackrel{?}{=} \lim_{|t|\to 0} \hat{\bar{\rho}}_t \doteq \lim_{|t|\to 0} \int_{-\infty}^{\infty} \frac{e^{-\frac{x^2}{2}}}{\sqrt{2\pi}} \cos\left(x\sqrt{it}\left(\sum_{j=1}^{n} \hat{O}_j\right)\right) \hat{\rho}_0 \cos\left(x\sqrt{-it^*}\left(\sum_{j=1}^{n} \hat{O}_j\right)\right) dx$$

HS EVOLUTION OF DENSITY MATRICES 3/3

It **holds**!

$$\lim_{|t|\to 0}\hat{\rho}_t=\hat{\rho}_0+\frac{it^*}{2}\hat{\rho}_0\left(\sum_{j=1}^{n}\hat{O}_j\right)^2-\frac{it}{2}\left(\sum_{j=1}^{n}\hat{O}_j\right)^2\hat{\rho}_0+O\left(|t|^2\right)$$

$$\lim_{|t|\to 0}\hat{\bar{\rho}}_t=\hat{\rho}_0+\frac{it^*}{2}\hat{\rho}_0\left(\sum_{j=1}^{n}\hat{O}_j\right)^2-\frac{it}{2}\left(\sum_{j=1}^{n}\hat{O}_j\right)^2\hat{\rho}_0+O\left(|t|^2\right)$$

Problems of cos:

- Not easily separable: $[\hat{O}_1,\hat{O}_2]=0 \Longrightarrow \cos(\hat{O}_1\pm\hat{O}_2)=\cos(\hat{O}_1)\cos(\hat{O}_2)\mp\sin(\hat{O}_1)\sin(\hat{O}_2)$
- Not unitary: $\cos(\hat{O})[\cos(\hat{O})]^\dagger=\cos(\hat{O})\cos(\hat{O}^\dagger)\neq\hat{\mathbb{I}}$

17 COS IMPLEMENTATION 1/2

- Add <u>one ancilla</u> and use the following circuit with <u>separable</u> $\hat{U} \doteq e^{ix\sqrt{it}\,\Sigma_j \hat{O}_j} \doteq e^{i\hat{a}}$

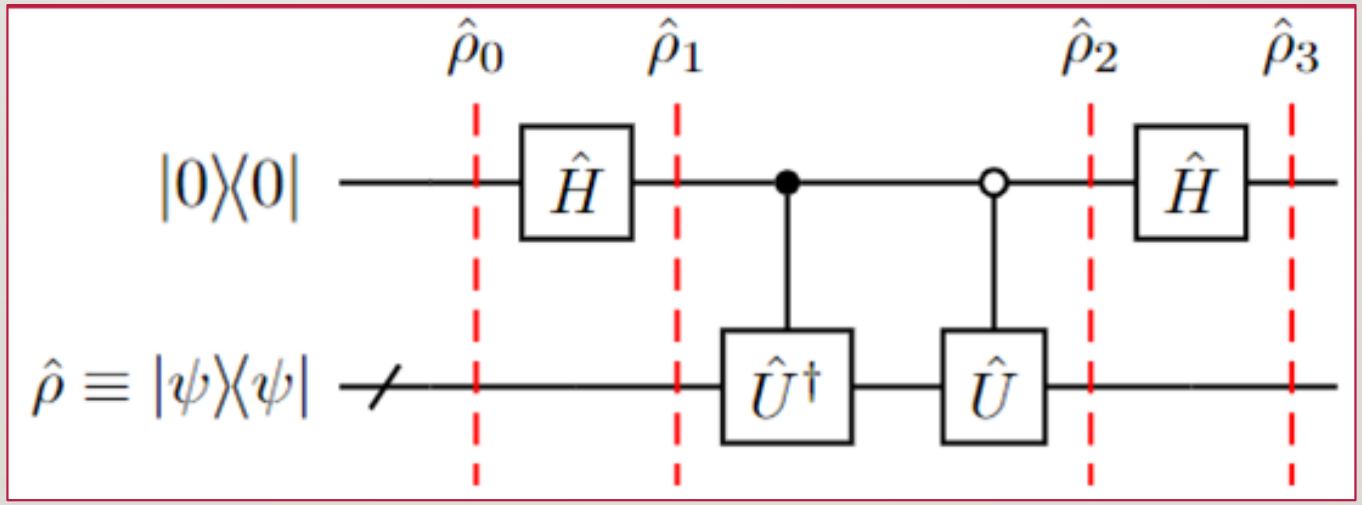

<u>Imaginary</u> t:

$$\hat{\rho}_3 = \begin{pmatrix} \cos(\hat{a})\hat{\rho}\cos(\hat{a}) & -i\cos(\hat{a})\hat{\rho}\sin(\hat{a}) \\ i\sin(\hat{a})\hat{\rho}\cos(\hat{a}) & \sin(\hat{a})\hat{\rho}\sin(\hat{a}) \end{pmatrix}$$

COS IMPLEMENTATION 2/2

Remarks:

- $\widehat{U}$ not unitary for $t \in \mathbb{R}$
- $\hat{\rho}_3$ rather difficult to compute for $t \in \mathbb{R}$

$\Longrightarrow$ at least OK for $t \in \mathbb{I}$

19 COS NORM

Focus on $t \in \mathbb{I}$:

$$\lim_{|t|\to 0} \langle\psi| \left[\cos\left(x\sqrt{it}\left(\sum_{j=1}^{n}\hat{O}_j\right)\right)\right]^{\dagger} \cos\left(x\sqrt{it}\left(\sum_{j=1}^{n}\hat{O}_j\right)\right)|\psi\rangle =$$

$$= \langle\psi|\,\hat{\mathbb{1}} + x^2 Im(t)\left(\sum_{j=1}^{n}\hat{O}_j\right)^2 + O(|t|^2)\,|\psi\rangle = \lim_{|t|\to 0} e^{x^2 Im(t)\langle\left(\sum_{j=1}^{n}\hat{O}_j\right)^2\rangle_\psi}$$

- Not unitary for $t \in \mathbb{I}, |t| \to 0$

$\Longrightarrow$ Adding complex offset to change normalization? <u>Doesn't work!</u>

EXPECTATION VALUES WITH HS

21 HS FOR EXPECTATION VALUES

- Problem with $\hat{\rho}$ evolution: Apply twice operator $e^{\pm ix\sqrt{it}\left(\sum_j \hat{o}_j\right)}$
- Alternative: Compute <u>expectation values</u> $\left\langle \hat{U}_t \right\rangle_{\hat{\rho}} = Tr\left[\hat{U}_t \hat{\rho}\right]$

$$Tr\left[e^{-it\frac{(\sum_{j=1}^{n}\hat{O}_j)^2}{2}}\hat{\rho}_0\right] = Tr\left[\int_{-\infty}^{\infty}\frac{e^{-\frac{x^2}{2}}}{\sqrt{2\pi}}e^{ix\sqrt{it}\sum_{j=1}^{n}\hat{O}_j}\hat{\rho}_0 dx\right] \doteq \int_{-\infty}^{\infty}\frac{e^{-\frac{x^2}{2}}}{\sqrt{2\pi}}Tr\left[\bigotimes_{j=1}^{n}\hat{u}_j(x,t)\hat{\rho}_0\right]dx =$$

$$= \int_{-\infty}^{\infty}\frac{e^{-\frac{x^2}{2}}}{\sqrt{2\pi}}\left(Re\left[\left\langle\bigotimes_{j=1}^{n}\hat{u}_j(x,t)\right\rangle_{\hat{\rho}_0}\right] + iIm\left[\left\langle\bigotimes_{j=1}^{n}\hat{u}_j(x,t)\right\rangle_{\hat{\rho}_0}\right]\right)dx$$

$$\hat{u}_j(x,t) \doteq e^{ix\sqrt{it}\hat{O}_j}$$

HS FOR EXPECTATION VALUES - IMPLEMENTATION

- <u>Hadamard Test</u> with one ancilla (case $n = 2$):

$$Re\left[\left\langle \bigotimes_{j=1}^{2} \hat{u}_j(x,t)\right\rangle_{\hat{\rho}_0}\right] \qquad Im\left[\left\langle \bigotimes_{j=1}^{2} \hat{u}_j(x,t)\right\rangle_{\hat{\rho}_0}\right]$$

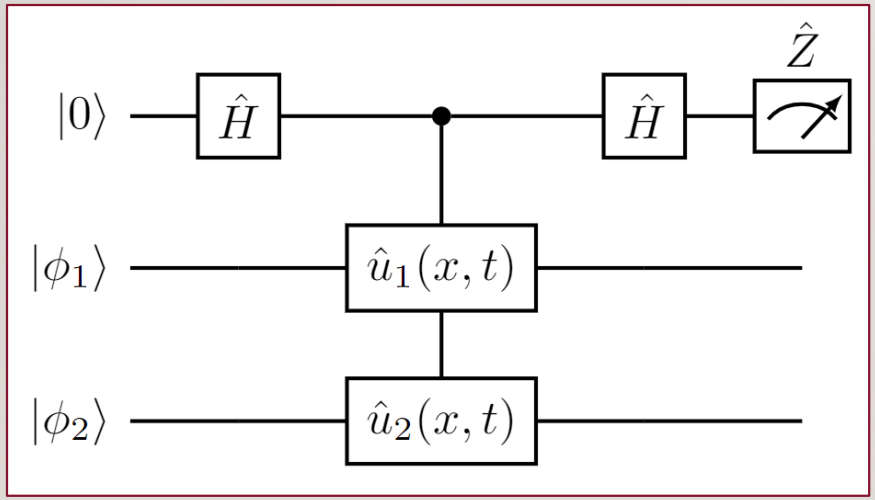

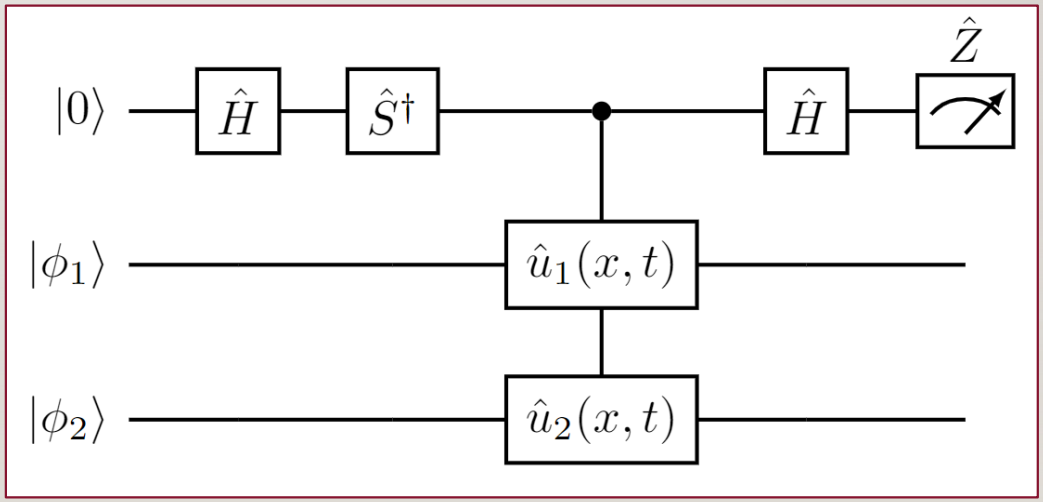

$$\hat{S}^\dagger = \begin{pmatrix} 1 & 0 \\ 0 & -i \end{pmatrix}$$

CONCLUSIONS

Performed

- HS transformation: multi-qubit operators → one-qubit operators
- Simulated 2-qubit systems with non-unitary operators: it works fine
- Possible but not trivial application to system time evolution
- Inspiring application to the computation of operator expectation values

Perspectives

- Hadamard test simulations
- Heisenberg model-like simulation (many particles)
- Experimental implementation

END

9B

PHASE DIFFERENCE – REAL TIME EVOLUTION

$$e^{-i\vec{\sigma}_1\cdot\vec{\sigma}_2 t}|01\rangle = e^{-i\vec{\sigma}_1\cdot\vec{\sigma}_2 t}\frac{1}{\sqrt{2}}\left(\frac{1}{\sqrt{2}}(|01\rangle + |10\rangle) + \frac{1}{\sqrt{2}}(|01\rangle - |10\rangle)\right)$$

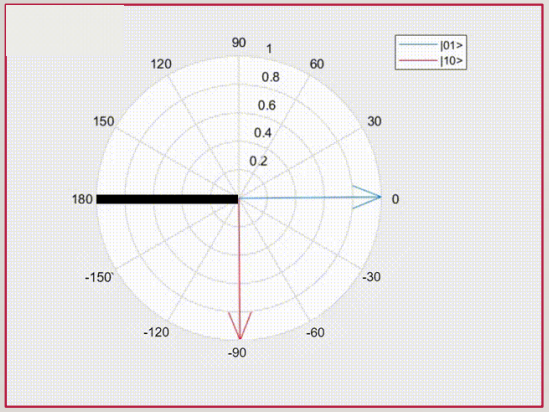

$$= \frac{e^{-it}}{\sqrt{2}}\left(\frac{1}{\sqrt{2}}(|01\rangle + |10\rangle) + e^{4it}\frac{1}{\sqrt{2}}(|01\rangle - |10\rangle)\right)$$

$$= \frac{1}{2}\left(e^{-it} + e^{3it}\right)|01\rangle + \frac{1}{2}\left(e^{-it} - e^{3it}\right)|10\rangle$$

$$= \cos(2t)\, e^{it}|01\rangle - i\sin(2t)\, e^{it}|10\rangle$$